PHILIPS
100 Craftway Dr.
Littlestown, Pennsylvania 17340-0128
Phone: 717-359-7131

INSTALLATION INSTRUCTIONS: Low Voltage Path Lights

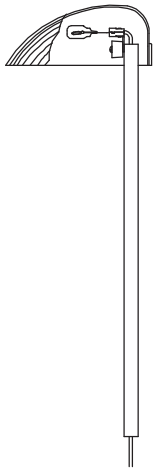

FOR MODELS
LVW140 & SKL1

1. TO INSERT WEDGE BASE LAMP, PRESS FIRMLY INTO SOCKET.
2. PROCEED TO CONNECTOR INSTRUCTIONS.

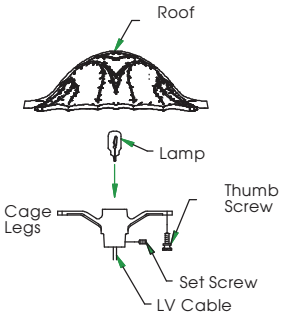

FOR MODELS
LVW131, LVW132, LVW133, LVW134,
LVW138, LVW139, LVW190, LVW6301,
LVW6302, LVW6304, LVW6307, LVW6315,
LVW6335, LVW25200,
LVW28400, TKL1, KCL1, VPL1, TKL2, TKL3,
KCL2, and AVL3

1. TO INSERT WEDGE BASE LAMP, PRESS FIRMLY INTO SOCKET.
2. REMOVE THREE THUMB SCREWS FROM BOTTOM OF ROOF.
3. PLACE ROOF ON FIXTURE OVER SOCKET AND THREAD THREE SCREWS INTO ROOF THROUGH CAGE LEGS.
4. PROCEED TO CONNECTOR INSTRUCTIONS.

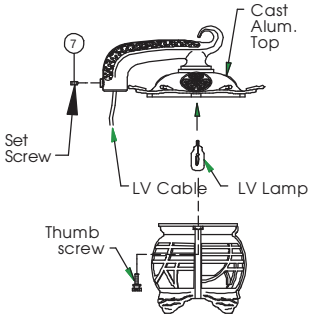

FOR MODELS
LVW141, LVW142, LVW143, LVW144,
LVW145, LVW146, LVW147, LVW148,
LVW149, LVW191, LVW6309,
LVW6310, LVW6325, LVW6329, VPSL1,
SKL1, SML2, SML3, SML4, SML5TKSL2,
TKSL3, OPSL1, and SKL2

1. THREAD WIRE THROUGH STEM. INSERT STEM INTO ARM AND TIGHTEN TWO SET SCREWS AGAINST STEM.
2. FOR MODELS WITH OPEN CAGE BOTTOM, LAMP MAY BE INSTALLED THROUGH CAGE. FOR MODELS WITH CLOSED CAGE, REMOVE THREE THUMB SCREWS, INSERT LAMP, AND REPLACE SCREWS.
3. TO INSERT WEDGE BASE LAMP, PRESS FIRMLY INTO SOCKET.
4. PROCEED TO CONNECTOR INSTRUCTIONS.

LOW VOLTAGE CABLE CONNECTOR INSTRUCTIONS

Low voltage cable connector to be used with 10 or 12 gauge supply cable and 18 gauge fixture cable. Philips recommends using SPT-3 water resistant (marked "WA", "W" or similar marking) supply cable such as our SCW500-10/BSCW500-10 or our SCW100-12/BSCW100-12. Philips also recommends ordering the entire system, which includes the power console (maximum 25 Amps, 15 Volts per circuit), fixture(s) (low voltage cable connector included) and supply cable to ensure proper installation and operation.

When using our supply cable, it can be laid on top of the ground, placed under "ground cover" (that is, shallow burial less than 6 inches or 15.2 cm deep), or directly buried in accordance with the NEC. If not using our cable, per UL 1838-Standard for Low Voltage Landscape Lighting Systems, the secondary cable must be SPT-3 or suitable for wet locations, sunlight resistant and direct burial per UL 493 and sized per UL 1838, and it must be buried less than 6 inches (15.2 cm).

Philips recommends a minimum depth of 4 inches when burying in the lawn to prevent damage from aerators or other lawn plugging equipment.

The 18 gauge fixture cable (provided with fixture) must be protected by routing in close proximity to the fixture or secured to a building structure such as a house or deck. The fixture cable must be cut off so that it is connected to the low voltage cable connector within 6 inches (15.2 cm) of the fixture or the building structure. When making an underground connection to the 10 or 12 gauge supply cable (not provided), the fixture cable must not be buried more than 6 inches (15.2 cm).

WARNING-Mount the luminaire in or on non-combustible mounting surfaces only.

WARNING-Risk of Electric Shock. Install all luminaires 10 feet (3.05m) or more from a pool, spa, or fountain.
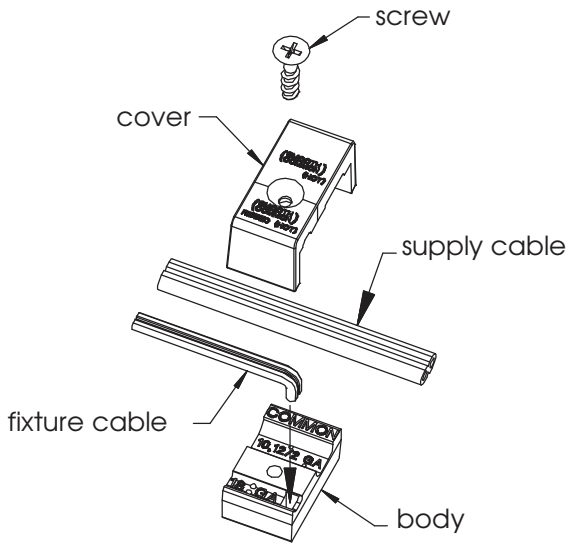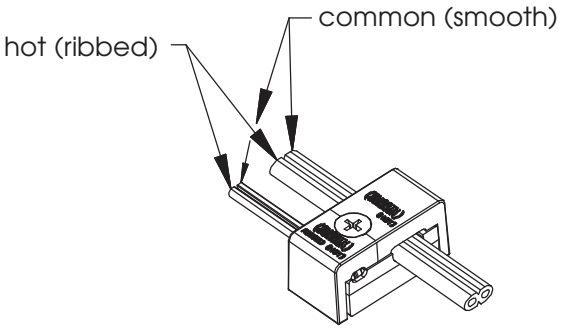
1. Connect the supply cable to the terminals on the power console (transformer) and turn ON.
2. Disassemble the connector by removing the Phillips head screw.
3. Inspect the connector to ensure the prongs are straight. If the prongs are bent, straighten with pliers.
4. Insert the end of the fixture cable into the square opening in the connector body. Bend wire over so that wire is laying in the recess marked '18 GA'. This will help hold the wire in place while performing steps 5 and 6. Only 2-wire cable is to be used and the common (smooth) wire and hot (ribbed) wires must be oriented as shown.
5. Press the supply cable into the recess marked '10,12/2 GA' on the connector body. Again the common (smooth) wires and the hot (ribbed) wires must be oriented as shown.
6. Press the connector cover onto the connector body, making sure the screw holes line up with each other.
7. Assemble the connector by tightening the Phillips head screw. NOTE: Make sure the metal prongs in the connector pierce all 4 wires; the fixture will light as the prongs pierce the wires.