PHILIPS
100 CraftwayDr.
Littlestown, Pennsylvania 17340-0128
Phone: 717-359-7131

INSTALLATION INSTRUCTIONS

HOW TO REMOVE SKIN PACKING:
DO NOT ATTEMPT TO SEPARATE FILM FROM CARDBOARD BACKING. YOU MAY DAMAGE THE FIXTURE OR GLASS.
TO REMOVE FIXTURE FROM SKIN PACKING, LAY FIXTURE ON A FLAT SURFACE. CUT FILM AROUND THE FIXTURE AND ACCESSORY PACKS. THE FILM WILL NOW PEEL OFF EASILY AND SAFELY.
MAKE SURE ALL PARTS ARE REMOVED FROM BOARD BEFORE DISCARDING.

CAULKING: CONTRACTOR MUST CAULK AROUND ALL WALLPLATES.
DARKER LINES REPRESENT CAULK AREAS.

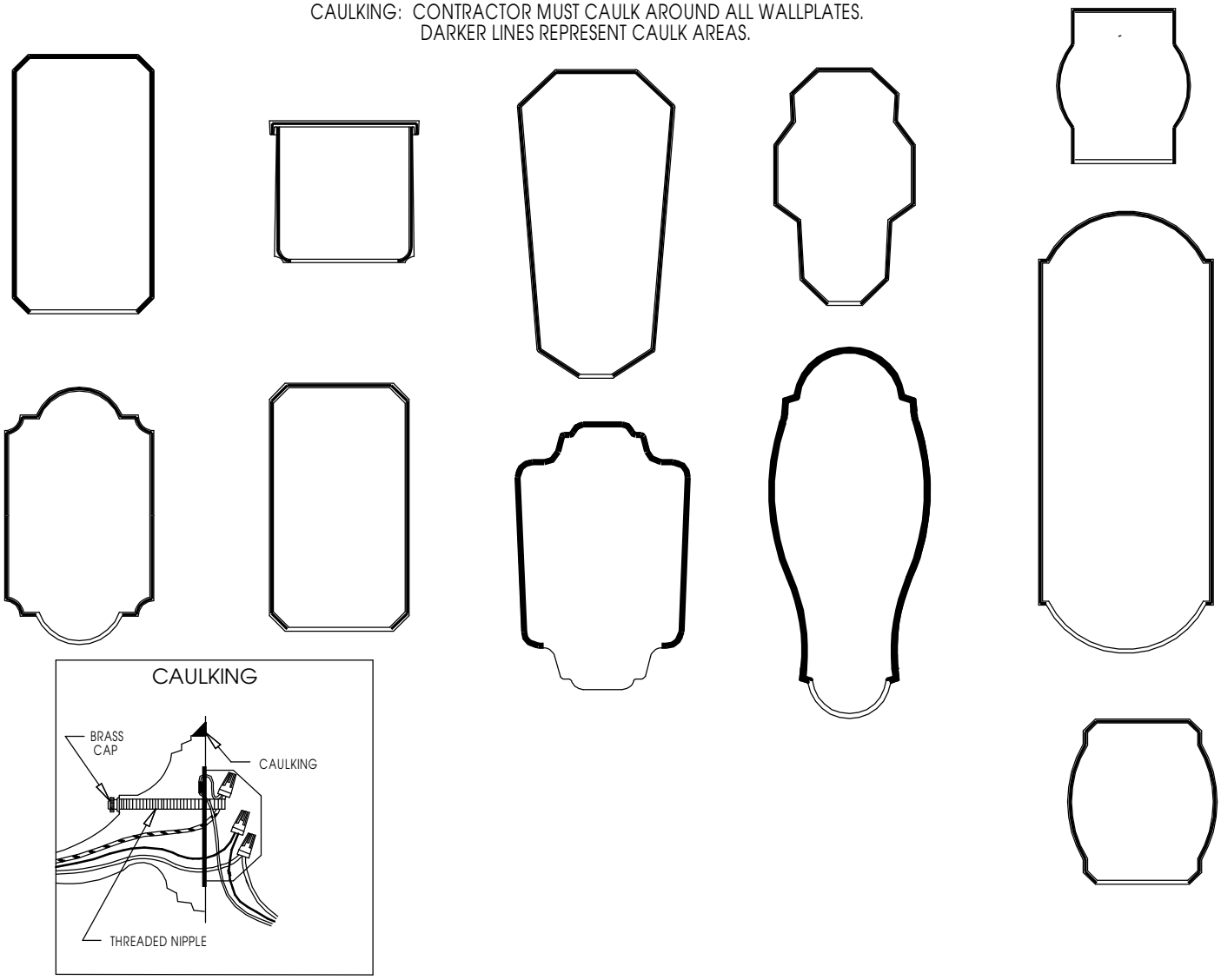

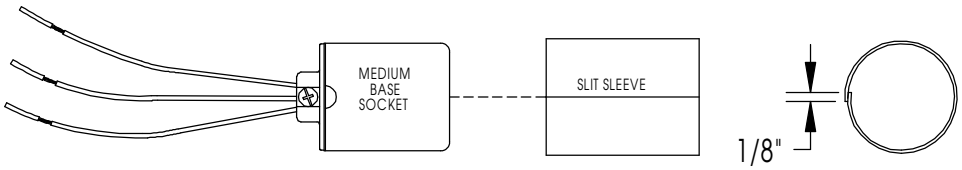

ASSEMBLY INSTRUCTIONS FOR ALL LANTERNS WITH MEDIUM BASE SOCKETS AND SLIT SLEEVES.

1. Squeeze slit sleeve by hand so that tension of sleeve grips socket as sleeve slides up unto socket. Overlap lip of sleeve by approximately 1/8" as shown.
2. Turn slit to rear of lantern as sleeve is attached.

PANEL INSTALLATION WITH POLYCARBONATE PANEL CLIPS

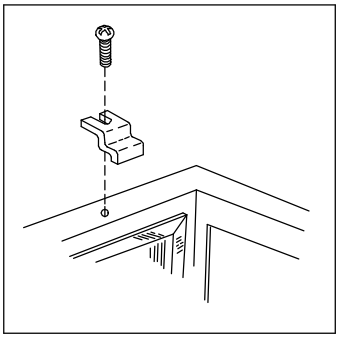

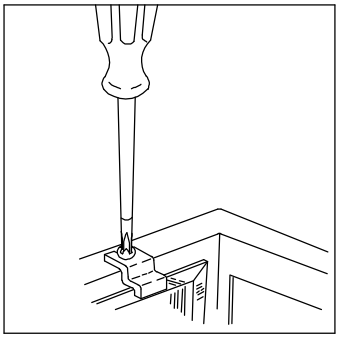

- Remove screws and clips from plastic bag.
- Insert panels (flat side out for textured or beveled panels) squarely and securely into tabbed areas in the lantern cage.
- Install clips and screws with screwdriver as shown in illustrations.
- DO NOT OVER TIGHTEN SCREWS. THIS COULD RESULT IN GLASS BREAKAGE.

PANEL INSTALLATION WITH METAL PANEL CLIPS.

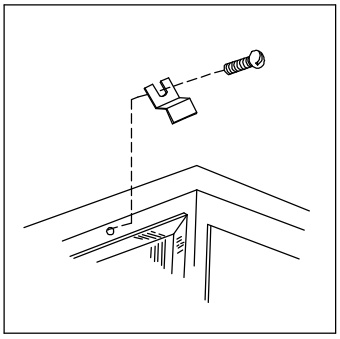

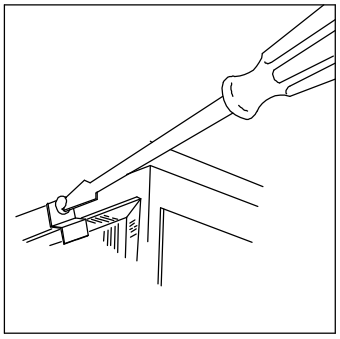

- Remove screws and clips from plastic bag.
- Insert panels (flat side out for textured or beveled panels), squarely and securely into tabbed areas in the lantern cage.
- Install clips and screws with screwdriver as shown in illustrations.
- DO NOT OVER TIGHTEN SCREWS. THIS COULD RESULT IN GLASS BREAKAGE.

PANEL INSTALLATION WITH POLYCARBONATE RETAINING RING

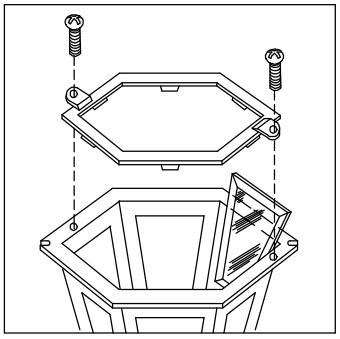

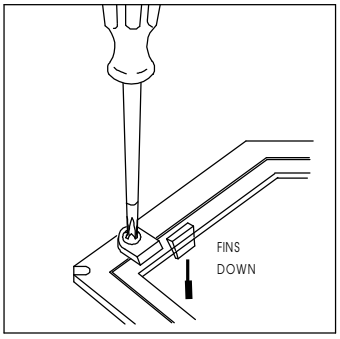

- Remove screws and clips from plastic bag.
- Insert panels (flat side out for textured or beveled panels), squarely and securely into tabbed areas provided in the lantern cage.
- Place retaining ring on lantern cage as shown, (ring fins must be down) to hold panels in place.
- Secure ring with two screws provided.
- DO NOT OVER TIGHTEN SCREWS.

WALL MOUNT INSTALLATION

- Install mounting bar with (2) screws at either end of the electrical box.
  - Turn threaded nipple into mounting bar.
  - Secure with provided nut and washer.
  - Connect fixture wires to supply wires per illustration below.
  - Slide fixture over nipple, then secure with brass cap.

(or)

- Install wallplate onto junction box and wire per above.
  - Then mount fixture with screws provided.

- Caulking around wall plate must be done to keep water out of electrical box in wet location installations.

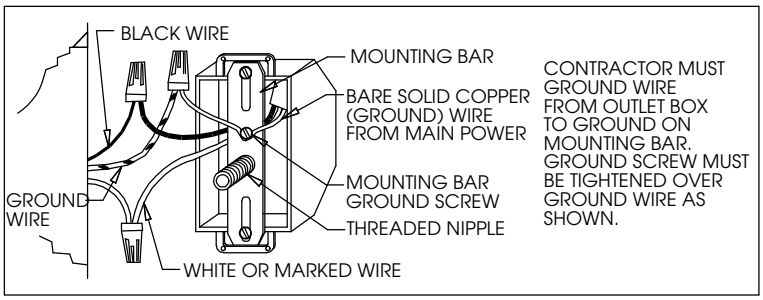

CEILING MOUNT INSTALLATION

- Install mounting bar to electrical junction box with screws.
- Turn threaded nipple into mounting bar.
- Secure with provided nut and washer.
- Connect fixture wires to supply wires, black to black, white to white, ground to ground.
- Slide canopy over nipple, then thread loop onto nipple and lock with thread loop nut.

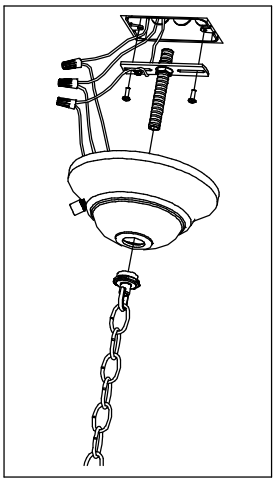

POST MOUNT INSTALLATION

- Connect fixture wires to supply wires per illustration below.
- Being careful not to pinch wires, slide fixture down over post.
- Tighten fixture to post with screws provided.

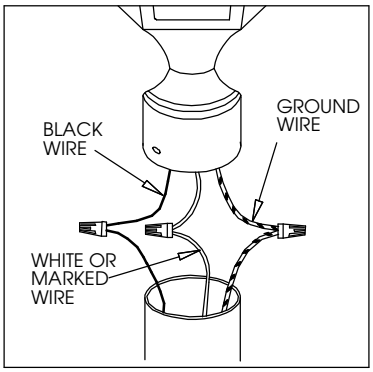

PIER MOUNT INSTALLATION

- Using provided template, mark hole locations for mounting.
- Drill holes in pier for lag shields included.
- Connect fixture wires to supply wires, white to white, black to black, and ground to ground.
- Push wire nuts and excess wire up inside fixture base.
- Being careful not to pinch wires, set fixture down onto pier, aligning drilled holes with holes in fixture base.
- Tighten bolts to secure fixture to pier.
- Silicone around base of fixture to keep water away from electrical connections.

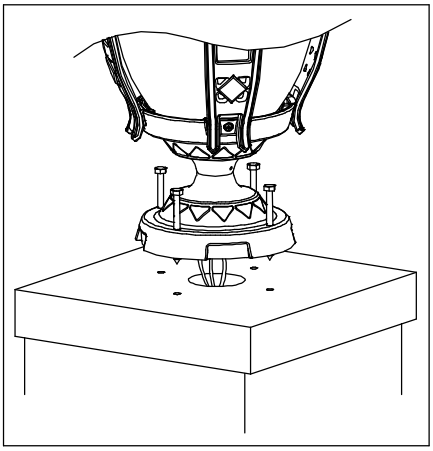

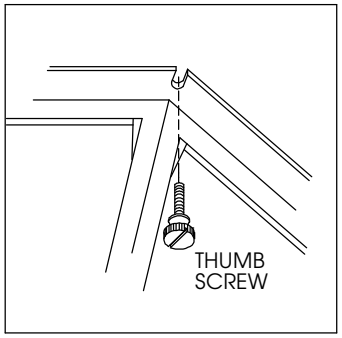

Relamping Note: Before re-installing thumbscrews, place a small amount of thread lubricant on screw threads. This will permit easy removal at a later date.