Small Manor Post Mount (B2530) Specification Sheet

Project Name:	Location:	MFG: Hanover Lantern
Fixture Type:	Catalog No.:	Qty:

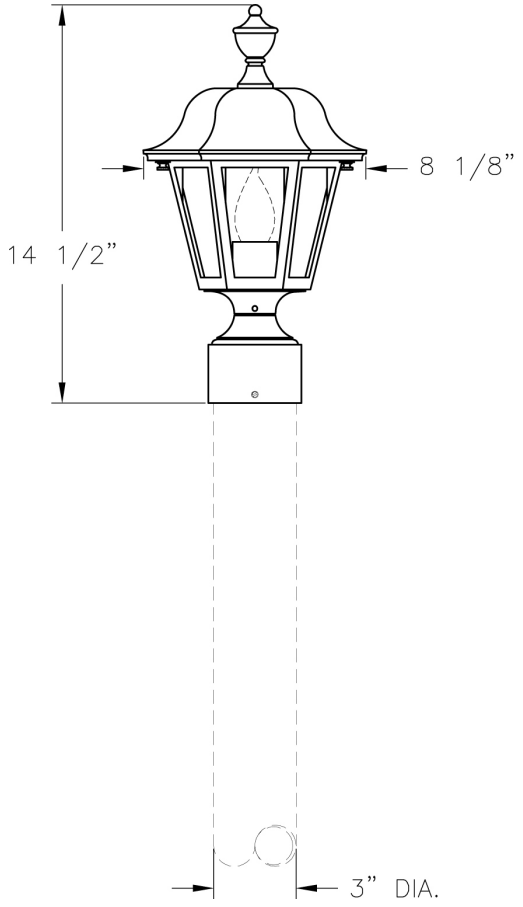

Ordering Guide

Example: B2530 ABS A D

Product Code	B2530	Small Manor Post Mount
Finish	ABS	Antique Brass
	ACP	Antique Copper
	ARD	Antique Red
	ASI	Antique Silver
	BLK	Black
	BRN	Brown
	BRZ	Bronze
	FGN	Forest Green
	GRA	Granite
	IRN	Ironstone
	RBZ	Rustic Bronze
	SRT	Shadow Rust
	VBZ	Verde Bronze
	VCP	Verde Copper
	VGN	Verde
	VTC	Vintage Copper
	WBZ	Weathered Bronze
	WHT	White
Panel/Globe	A	Clear Acrylic (standard)
	C	Clear Seeded Acrylic
	E	Clear Textured Acrylic
	B	Opal Acrylic
	M	Opal Polycarbonate
	Q	Prismatic Polycarbonate
	D	Bronze Tone Acrylic
	P	Clear Polycarbonate
	J	Clear Beveled Glass
	G	Clear Glass
	K	Clear Seeded Glass
	F	Frosted Glass
	H	Opalescent Honey Glass
	L	White Iridescent
Lamping	D	Medium Base

Specifications

CONSTRUCTION:
Cast aluminum hex roof secured with thumbscrews. Cast aluminum hex cage with cone bottom. Cast aluminum post fitter slips over 3” dia. post (order separately) or tenon. Cast aluminum finial attached to roof.

FINISH:
Resilient TGIC thermoset polyester powdercoat paint is electrostatically applied to every fixture. Specially formulated for Philips Outdoor Lighting, it provides UV protection, and the highest temperature rating in the industry. In addition to the standard color choices shown, a spectrum of custom colors is available.

PANELS/LENS/GLOBE:
Set of 6 Clear Acrylic (CA) panels (standard). Higher wattages may be used only with glass panels installed.

LAMPING:
60W maximum A19 lamp per medium base socket. Lamp is not included. Higher wattages may be used only with glass panels installed.

PHILIPS
Hanover LANTERN
Note: Philips reserves the right to modify the above details to reflect changes in the cost of materials and/or production and/or design without prior notice.
100 Craftway Drive, Littlestown, PA 17340 | P: +1-717-359-7131 F: +1-717-359-8715 | http://www.hanoverlantern.com | Copyright 2013 Philips

Small Manor Post Mount (B2530) Specification Sheet

Project Name:	Location:	MFG: Hanover Lantern
Fixture Type:	Catalog No.:	Qty:

ELECTRICAL ASSEMBLY:
Porcelain medium base socket with painted aluminum cover. Fixture is pre-wired with 18 AWG black, white, and ground wires. Lantern will be prewired and tested. All electrical components are ETL listed.

MOUNTING:
Fixture mounts to 3" dia. post or tenon.

WARRANTY:
Lifetime limited warranty.

CERTIFICATIONS:
ETL Listed to U.S. safety standards for wet locations. cETL Listed to Canadian safety standards for wet locations.

Height:
14 1/2"

Width:
8 1/8"

Max. Weight:
4.5 lb.

PHILIPS
Hanover LANTERN
Note: Philips reserves the right to modify the above details to reflect changes in the cost of materials and/or production and/or design without prior notice.
100 Craftway Drive, Littlestown, PA 17340 | P: +1-717-359-7131 F: +1-717-359-8715 | http://www.hanoverlantern.com | Copyright 2013 Philips