Small Salem Wall Mount (B8902) Specification Sheet

Project Name:	Location:	MFG: Hanover Lantern
Fixture Type:	Catalog No.:	Qty:

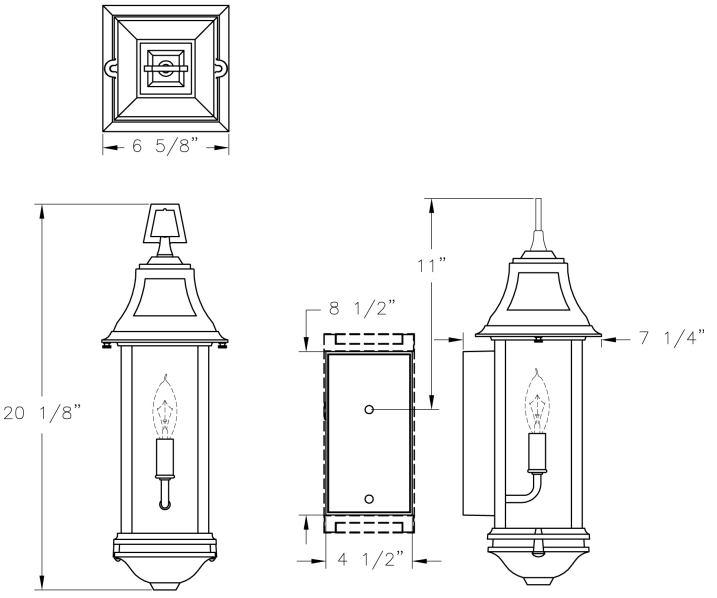

Ordering Guide

Example: B8902 ABS A C1

Product Code	B8902	Small Salem Wall Mount
Finish	ABS	Antique Brass
	ACP	Antique Copper
	ARD	Antique Red
	ASI	Antique Silver
	BLK	Black
	BRN	Brown
	BRZ	Bronze
	FGN	Forest Green
	GRA	Granite
	IRN	Ironstone
	RBZ	Rustic Bronze
	SRT	Shadow Rust
	VBZ	Verde Bronze
	VCP	Verde Copper
	VGN	Verde
	VTC	Vintage Copper
	WBZ	Weathered Bronze
	WHT	White
Panel/Globe	A	Clear Acrylic (standard)
	C	Clear Seeded Acrylic
	E	Clear Textured Acrylic
	B	Opal Acrylic
	D	Bronze Tone Acrylic
	P	Clear Polycarbonate
	M	Opal Polycarbonate
	Q	Prismatic Polycarbonate
Lamping	C1	Candelabra

Specifications

CONSTRUCTION:
Cast aluminum wall bracket. Cast aluminum roof. To relamp, remove two (2) screws. Cast aluminum top & bottom cage frame attaches to legs with machine screws. Extruded aluminum legs with "U" channels secure cage panels. Cast aluminum loop. Cast aluminum bottom attaches to cage frame.

FINISH:
Resilient TGIC thermoset polyester powdercoat paint is electrostatically applied to every fixture. Specially formulated for Philips Outdoor Lighting, it provides UV protection, and the highest temperature rating in the industry. In addition to the standard color choices shown, a spectrum of custom colors is available.

PANELS/LENS/GLOBE:
Set of 3 Clear Acrylic (CA) panels (standard). Acrylic panels only. Higher wattages may be used only with glass panels installed.

LAMPING:
25W maximum B10 lamp per candelabra base. Lamp is not included. Higher wattages may be used only with glass panels installed.

ELECTRICAL ASSEMBLY:
Single Candelabra socket with painted aluminum sleeve. Fixture is pre-wired with 18 AWG black, white, and ground wires. Lantern will be prewired and tested. All electrical components are ETL listed.

MOUNTING:
See template for dimensions & mounting instructions.

WARRANTY:

PHILIPS
Hanover LANTERN
Note: Philips reserves the right to modify the above details to reflect changes in the cost of materials and/or production and/or design without prior notice.
100 Craftway Drive, Littlestown, PA 17340 | P: +1-717-359-7131 F: +1-717-359-8715 | http://www.hanoverlantern.com | Copyright 2013 Philips

Small Salem Wall Mount (B8902) Specification Sheet

Project Name:	Location:	MFG: Hanover Lantern
Fixture Type:	Catalog No.:	Qty:

Lifetime limited warranty.

CERTIFICATIONS:
ETL Listed to U.S. safety standards for wet locations. cETL Listed to Canadian safety standards for wet locations.

Height:
20 1/8"

Width:
6 5/8"

Projection:
7 1/4"

Top to Outlet:
11"

Max. Weight:

PHILIPS
Hanover LANTERN
Note: Philips reserves the right to modify the above details to reflect changes in the cost of materials and/or production and/or design without prior notice.
100 Craftway Drive, Littlestown, PA 17340 | P: +1-717-359-7131 F: +1-717-359-8715 | http://www.hanoverlantern.com | Copyright 2013 Philips