Medium Fluorescent Milano Ceiling Lantern (B54420FL) Specification Sheet

Project Name:	Location:	MFG: Hanover Lantern
Fixture Type:	Catalog No.:	Qty:

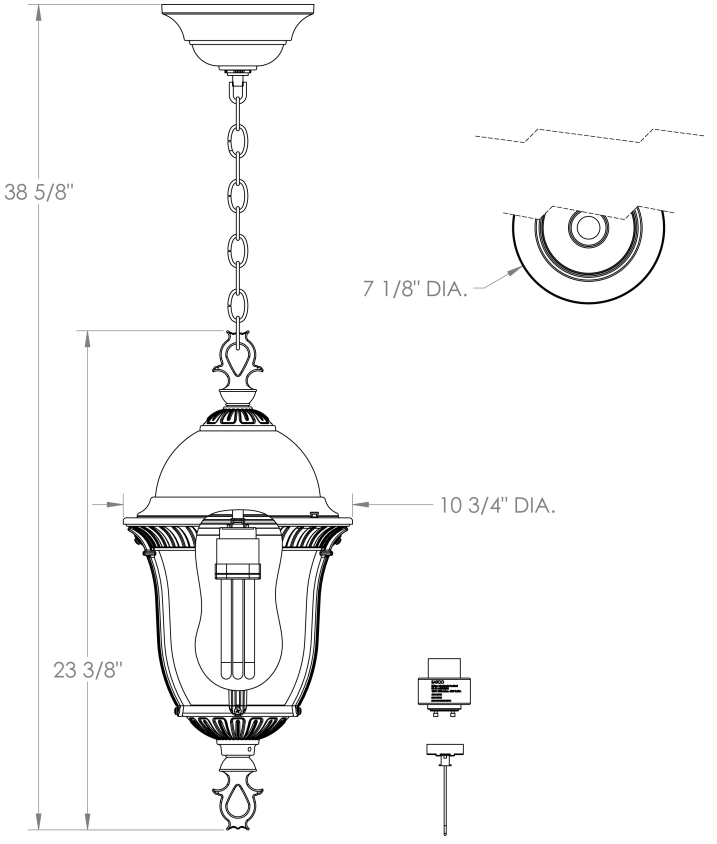

Ordering Guide

Example: B54420FL ABS 13W G

Product Code	B54420FL	Medium Fluorescent Milano Ceiling Lantern
Finish	ABS	Antique Brass
	ACP	Antique Copper
	ARD	Antique Red
	ASI	Antique Silver
	BLK	Black
	BRN	Brown
	BRZ	Bronze
	FGN	Forest Green
	GRA	Granite
	IRN	Ironstone
	RBZ	Rustic Bronze
	SRT	Shadow Rust
	VBZ	Verde Bronze
	VCP	Verde Copper
	VGN	Verde
	VTC	Vintage Copper
	WBZ	Weathered Bronze
	WHT	White
Panels/Lens/Globe	G	Clear Glass Globe
	F	Frosted Glass Globe
	R	Thumb Print Globe
Wattage/Source	13W	Fluorescent 13W
	18W	Fluorescent 18W
	26W	Fluorescent 26W
	32W	Fluorescent 32W
	42W	Fluorescent 42W

Specifications

CONSTRUCTION:
Four (4) cast aluminum legs secure top and bottom rings. Spun aluminum roof secures to top ring with thumbscrews. Painted spun aluminum dome. Decorative cast aluminum cage bottom. Fluted cast aluminum top ring. Cast aluminum ceiling canopy. 12" long painted steel chain attached to cast aluminum loop. Knob and finial are cast aluminum.

FINISH:
Resilient TGIC thermoset polyester powdercoat paint is electrostatically applied to every fixture. Specially formulated for Philips Outdoor Lighting, it provides UV protection, and the highest temperature rating in the industry. In addition to the standard color choices shown, a spectrum of custom colors is available.

PANELS/LENS/GLOBE:
Clear Glass Globe (CG) is standard. More opaque or colored panels are preferred to help conceal an Energy Star or Fluorescent Lamp.

LAMPING:
42W maximum fluorescent ballast. Twist lock GX24q four (4) pin socket ballast provided. Electronic fluorescent ballast (Customer must specify wattage). 120 volt HPF supplied. (Lamp not supplied).

ELECTRICAL ASSEMBLY:
Fixture is pre-wired with 18 AWG black, white, and ground wires. Lantern will be prewired and tested. All electrical components are ETL listed.

MOUNTING:
See template for dimensions & mounting instructions.

PHILIPS
Hanover LANTERN
Note: Philips reserves the right to modify the above details to reflect changes in the cost of materials and/or production and/or design without prior notice.
100 Craftway Drive, Littlestown, PA 17340 | P: +1-717-359-7131 F: +1-717-359-8715 | http://www.hanoverlantern.com | Copyright 2013 Philips

Medium Fluorescent Milano Ceiling Lantern (B54420FL) Specification Sheet

Project Name:	Location:	MFG: Hanover Lantern
Fixture Type:	Catalog No.:	Qty:

WARRANTY:
Lifetime limited warranty.

CERTIFICATIONS:
ETL Listed to U.S. safety standards for wet locations. cETL Listed to Canadian safety standards for wet locations.

Height:
38 3/4"

Width:
10 3/4"

Max. Weight:

PHILIPS
Hanover LANTERN
Note: Philips reserves the right to modify the above details to reflect changes in the cost of materials and/or production and/or design without prior notice.
100 Craftway Drive, Littlestown, PA 17340 | P: +1-717-359-7131 F: +1-717-359-8715 | http://www.hanoverlantern.com | Copyright 2013 Philips