Sante Fe (2250) Specification Sheet

Project Name:	Location:	MFG: Hanover Lantern
Fixture Type:	Catalog No.:	Qty:

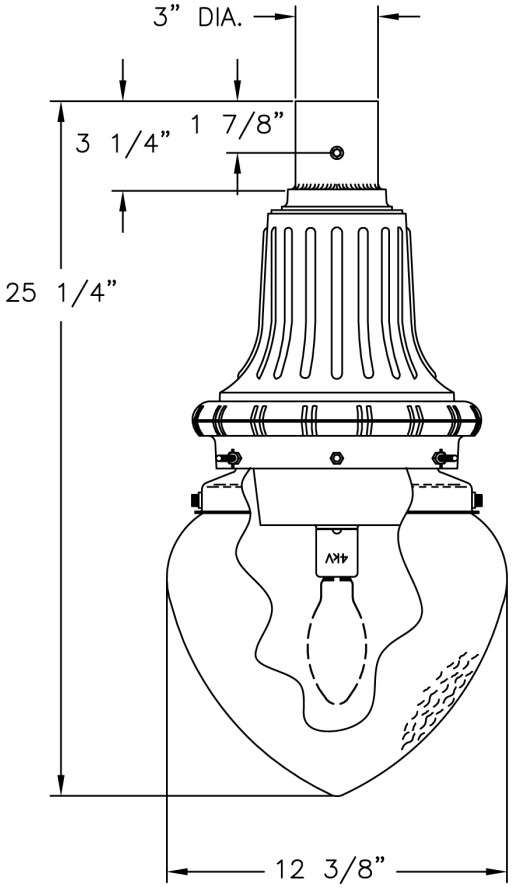

Ordering Guide

Example: 2250 ABS S D 50H E N B

Product Code	2250	Sante Fe	
Finish	ABS	Antique Brass	
	ACP	Antique Copper	
	ARD	Antique Red	
	ASI	Antique Silver	
	BLK	Black	
	BRN	Brown	
	BRZ	Bronze	
	FGN	Forest Green	
	GRA	Granite	
	IRN	Ironstone	
	RBZ	Rustic Bronze	
	SRT	Shadow Rust	
	VBZ	Verde Bronze	
	VCP	Verde Copper	
	VGN	Verde	
	VTC	Vintage Copper	
	WBZ	Weathered Bronze	
	WHT	White	
Panels/Lens/Globe	S	Sm. Textured Polycarbonate	
Socket	D	Medium	
Wattage/Source	50H	50W MH	
	70H	70W MH	
	100H	100W MH	
	150H	150W MH	
	35S	35W HPS	*1
	50S	50W HPS	
	70S	70W HPS	
	100S	100W HPS	
	150S	150W HPS	
	150I	150W INC.	*1
Voltage	E	120V	
	F	208V	
	G	240V	
	H	277V	
Distribution	N	None	
Photoeye	B	Button Eye	
	N	None	

*1 35W HPS and 150W INC (E) 120V Only

Specifications

CONSTRUCTION:
3" dia. aluminum fitter welded to cast aluminum fluted ballast housing. Spun aluminum neck fitter.

FINISH:
Resilient TGIC thermoset polyester powdercoat paint is electrostatically applied to every fixture. Specially formulated for Philips Outdoor Lighting, it provides UV protection, and the highest temperature rating in the industry. In addition to the standard color choices shown, a spectrum of custom colors is available.

PANELS/LENS/GLOBE:
See lenses for available options.

LAMPING:
Lamp is not included.

ELECTRICAL ASSEMBLY:
Lantern will be prewired and tested. All electrical components are ETL listed.

PHILIPS
Hanover LANTERN
Note: Philips reserves the right to modify the above details to reflect changes in the cost of materials and/or production and/or design without prior notice.
100 Craftway Drive, Littlestown, PA 17340 | P: +1-717-359-7131 F: +1-717-359-8715 | http://www.hanoverlantern.com | Copyright 2013 Philips

Project Name:	Location:	MFG: Hanover Lantern
Fixture Type:	Catalog No.:	Qty:

BALLAST:
Two piece cast aluminum watertight ballast compartment with 16 flutes. (Customer must specify ballast wattage and voltage required.)

MOUNTING:
Fixture mounts to bracket arm. See accessories.

WARRANTY:
Three-year limited warranty.

CERTIFICATIONS:
ETL Listed to U.S. safety standards for wet locations. cETL Listed to Canadian safety standards for wet locations.

Height:
25 1/8"

Width:
12 3/8"

Fitter:
3"

EPA:
1.20

Max. Weight:
44 lbs.

PHILIPS
Hanover LANTERN
Note: Philips reserves the right to modify the above details to reflect changes in the cost of materials and/or production and/or design without prior notice.
100 Craftway Drive, Littlestown, PA 17340 | P: +1-717-359-7131 F: +1-717-359-8715 | http://www.hanoverlantern.com | Copyright 2013 Philips