Anchor Base Post (729-) Specification Sheet

Project Name:	Location:	MFG: Hanover Lantern
Fixture Type:	Catalog No.:	Qty:

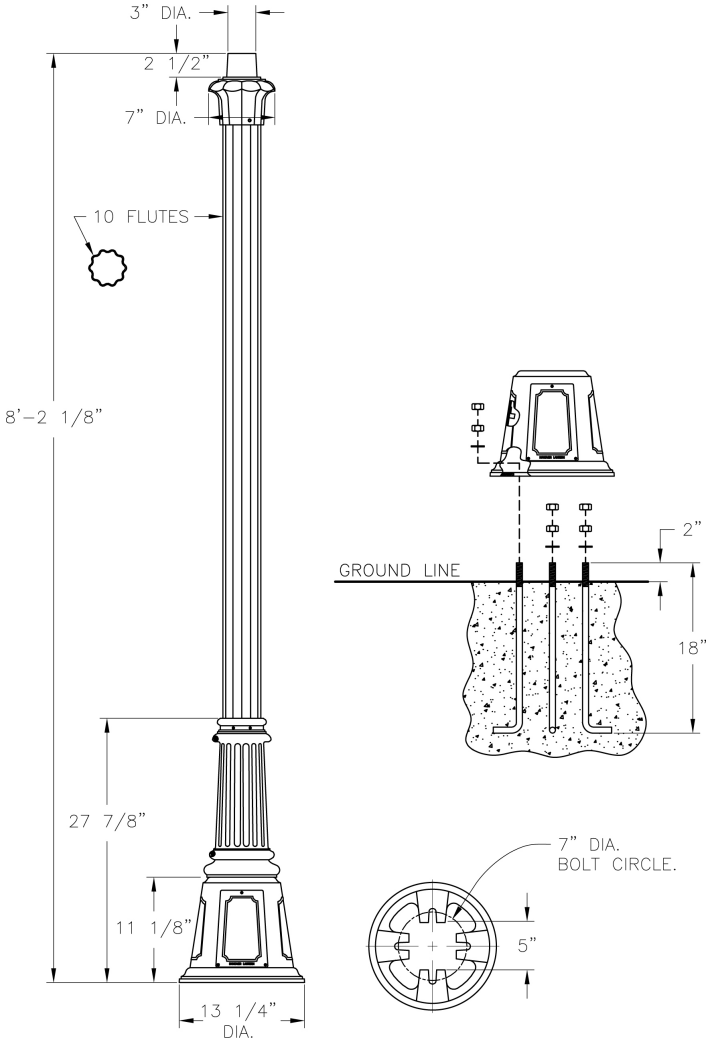

Ordering Guide

Example: 729- 10 ABS B B D

Product Code	729-	Anchor Base Post
Height(s)	10 12	(10 ft.) (12 ft.)
Finish	ABS ACP ARD ASI BLK BRN BRZ FGN GRA IRN RBZ SRT VBZ VCP VGN VTC WBZ WHT	Antique Brass Antique Copper Antique Red Antique Silver Black Brown Bronze Forest Green Granite Ironstone Rustic Bronze Shadow Rust Verde Bronze Verde Copper Verde Vintage Copper Weathered Bronze White
Photoeye (Optional)	B C	120V 208V - 277V
Outlet Location (Optional)	B T	4" from Top of Base 12" from Top of Pole
Outlet Options (Optional)	D G	Standard Duplex GFI Duplex

Specifications

OUTLET:
GFI Duplex Outlet has dual-function indicator light, universal metal weatherproof cover. Weatherproof while in use. Heavy-duty all-metal construction. Lockable security cover. Meets NEC 406.9 (B). Weather resistant. Standard Duplex Outlet has universal metal weatherproof cover. Weatherproof while in use. Heavy-duty all-metal construction. Lockable security cover. Meets NEC 406.9 (B). Weather resistant.

CONSTRUCTION:
Cast aluminum round anchor base. Cast aluminum removable access door. Round Fluted post welded to base. Two piece cast aluminum wrap-around base included. Tenon attached to post top.

FINISH:
Resilient TGIC thermoset polyester powdercoat paint is electrostatically applied to every fixture. Specially formulated for Hanover Lantern, it provides UV protection, and the highest temperature rating in the industry. In addition to the standard color choices shown, a spectrum of custom colors is available.

WARRANTY:
Three-year limited warranty.

Tenon/Top:

PHILIPS
Hanover LANTERN
Note: Philips reserves the right to modify the above details to reflect changes in the cost of materials and/or production and/or design without prior notice.
100 Craftway Drive, Littlestown, PA 17340 | P: +1-717-359-7131 F: +1-717-359-8715 | http://www.hanoverlantern.com | Copyright 2013 Philips

Anchor Base Post (729-) Specification Sheet

Project Name:	Location:	MFG: Hanover Lantern
Fixture Type:	Catalog No.:	Qty:

3" O.D.

Bolt Circle:
7" dia.

Anchor Rods:
(4) 1/2" dia. x 18" long zinc plated steel

Base Dimensions:
13 1/4" dia. x 11 1/8"

Shaft:
4" Round Fluted

Wall Thickness:
.125"

Height:
8', 10', 12'

Pole EPA Values

	Height	
Windspeed(mph)	10'	12'
80	6.9500	5.9600
110	6.0300	4.3300
130	1.5800	0.4500

PHILIPS
Hanover LANTERN
Note: Philips reserves the right to modify the above details to reflect changes in the cost of materials and/or production and/or design without prior notice.
100 Craftway Drive, Littlestown, PA 17340 | P: +1-717-359-7131 F: +1-717-359-8715 | http://www.hanoverlantern.com | Copyright 2013 Philips