Small Jamestown Wall Mount (B2370) Specification Sheet

Project Name:	Location:	MFG: Hanover Lantern
Fixture Type:	Catalog No.:	Qty:

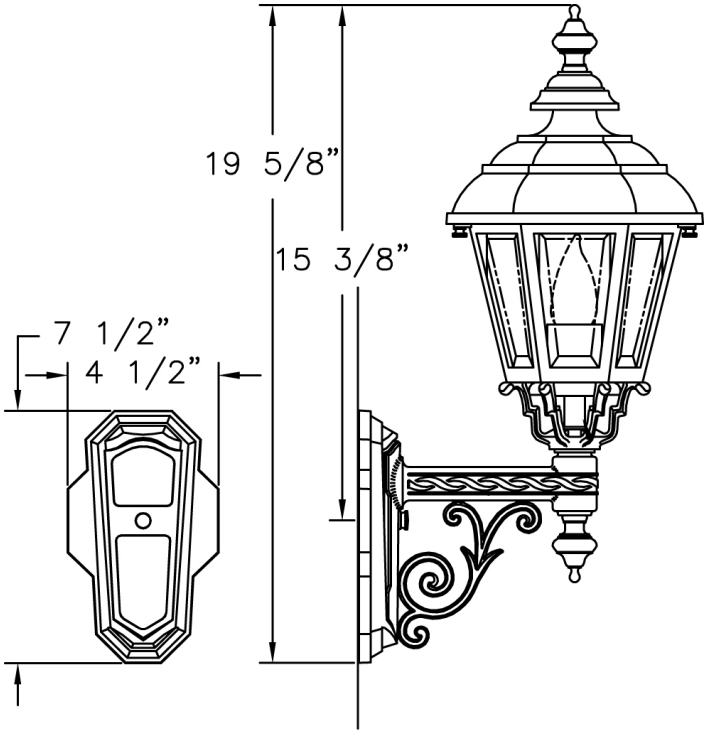

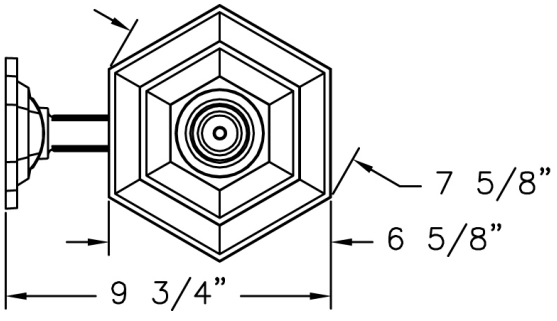

Ordering Guide

Example: B2370 ABS J D

Product Code	B2370	Small Jamestown Wall Mount
Finish	ABS	Antique Brass
	ACP	Antique Copper
	ARD	Antique Red
	ASI	Antique Silver
	BLK	Black
	BRN	Brown
	BRZ	Bronze
	FGN	Forest Green
	GRA	Granite
	IRN	Ironstone
	RBZ	Rustic Bronze
	SRT	Shadow Rust
	VBZ	Verde Bronze
	VCP	Verde Copper
	VGN	Verde
	VTC	Vintage Copper
	WBZ	Weathered Bronze
	WHT	White
Panel/Globe	J	Clear Beveled Glass
	G	Clear Glass
	F	Frosted Glass
	K	Clear Seeded Glass
	H	Opalescent Honey Glass
	L	White Iridescent
	A	Clear Acrylic
	B	Opal Acrylic
	E	Clear Textured Acrylic
	D	Bronze Tone Acrylic
	C	Clear Seeded Acrylic
	P	Clear Polycarbonate
	M	Opal Polycarbonate
	Q	Prismatic Polycarbonate
Lamping	D	Medium Base

Specifications

CONSTRUCTION:
Cast aluminum construction. Cast aluminum decorative scroll bracket arm and wallplate. Turned Aluminum knob & finial.

FINISH:
Resilient TGIC thermoset polyester powdercoat paint is electrostatically applied to every fixture. Specially formulated for Philips Outdoor Lighting, it provides UV protection, and the highest temperature rating in the industry. In addition to the standard color choices shown, a spectrum of custom colors is available.

PANELS/LENS/GLOBE:
Set of 6 Clear Beveled Glass (CBG) panels (standard).

LAMPING:
60W maximum A19 lamp per medium base socket. Lamp is not included. Higher wattages may be used only with glass panels installed.

PHILIPS
Hanover LANTERN
Note: Philips reserves the right to modify the above details to reflect changes in the cost of materials and/or production and/or design without prior notice.
100 Craftway Drive, Littlestown, PA 17340 | P: +1-717-359-7131 F: +1-717-359-8715 | http://www.hanoverlantern.com | Copyright 2013 Philips

Small Jamestown Wall Mount (B2370) Specification Sheet

Project Name:	Location:	MFG: Hanover Lantern
Fixture Type:	Catalog No.:	Qty:

ELECTRICAL ASSEMBLY:
Porcelain medium base socket with painted aluminum cover. Fixture is pre-wired with 18 AWG black, white, and ground wires. Lantern will be prewired and tested. All electrical components are ETL listed.

MOUNTING:
Mounting Hardware is supplied. See template for dimensions & mounting instructions.

WARRANTY:
Lifetime limited warranty.

CERTIFICATIONS:
ETL Listed to U.S. safety standards for wet locations. cETL Listed to Canadian safety standards for wet locations.

Height:
19 5/8"

Width:
7 5/8"

Projection:
9 3/4"

Top to Outlet:
15 3/8"

Max. Weight:
8.25 lb.

PHILIPS
Hanover LANTERN
Note: Philips reserves the right to modify the above details to reflect changes in the cost of materials and/or production and/or design without prior notice.
100 Craftway Drive, Littlestown, PA 17340 | P: +1-717-359-7131 F: +1-717-359-8715 | http://www.hanoverlantern.com | Copyright 2013 Philips