Small Plymouth Post Mount (B2430) Specification Sheet

Project Name:	Location:	MFG: Hanover Lantern
Fixture Type:	Catalog No.:	Qty:

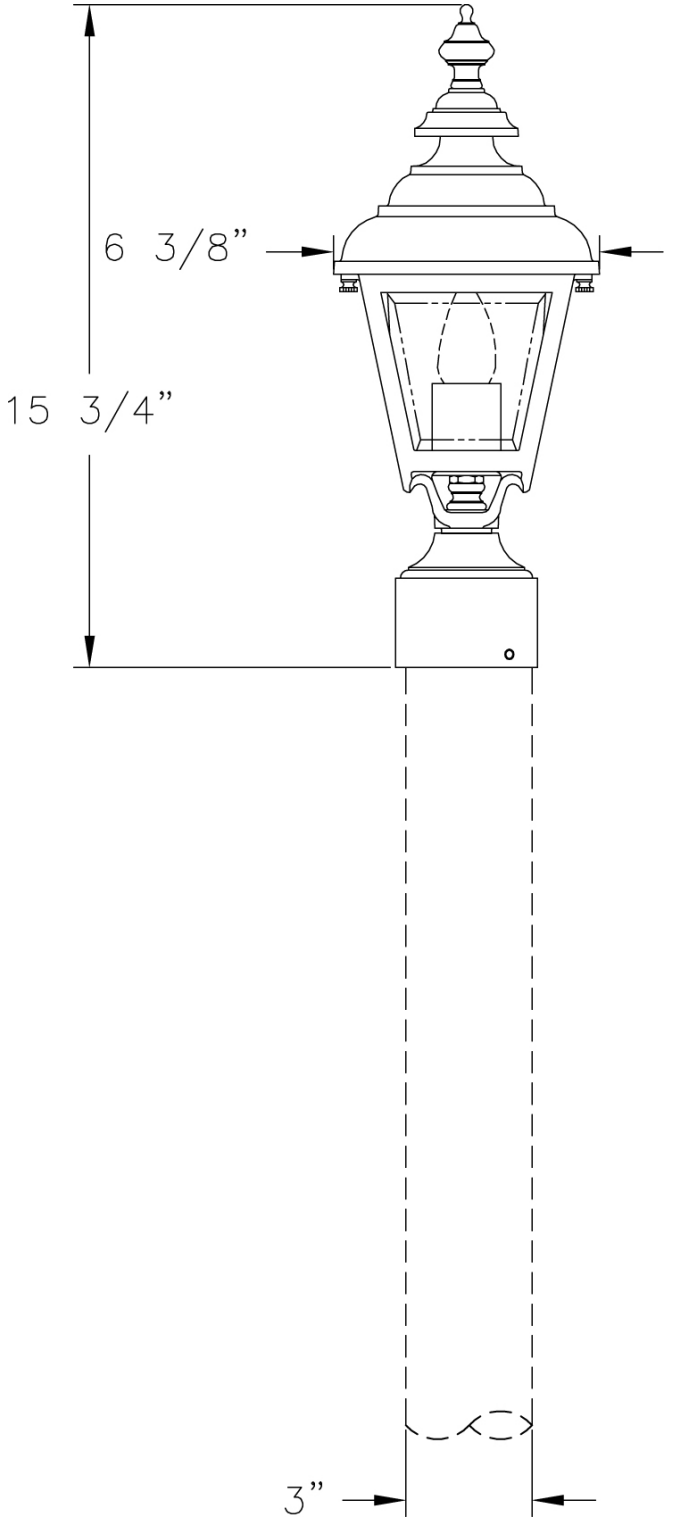

Ordering Guide

Example: B2430 ABS J D

Product Code	B2430	Small Plymouth Post Mount
Finish	ABS	Antique Brass
	ACP	Antique Copper
	ARD	Antique Red
	ASI	Antique Silver
	BLK	Black
	BRN	Brown
	BRZ	Bronze
	FGN	Forest Green
	GRA	Granite
	IRN	Ironstone
	RBZ	Rustic Bronze
	SRT	Shadow Rust
	VBZ	Verde Bronze
	VCP	Verde Copper
	VGN	Verde
	VTC	Vintage Copper
	WBZ	Weathered Bronze
	WHT	White
Panel/Globe	J	Clear Beveled Glass
	A	Clear Acrylic
	C	Clear Seeded Acrylic
	K	Clear Seeded Glass
	E	Clear Textured Acrylic
	B	Opal Acrylic
	D	Bronze Tone Acrylic
	M	Opal Polycarbonate
	Q	Prismatic Polycarbonate
	P	Clear Polycarbonate
	G	Clear Glass
	F	Frosted Glass
	H	Opalescent Honey Glass
	L	White Iridescent
Lamping	D	Medium Base

PHILIPS
Hanover LANTERN

Note: Philips reserves the right to modify the above details to reflect changes in the cost of materials and/or production and/or design without prior notice.
100 Craftway Drive, Littlestown, PA 17340 | P: +1-717-359-7131 F: +1-717-359-8715 | http://www.hanoverlantern.com | Copyright 2013 Philips

Small Plymouth Post Mount (B2430) Specification Sheet

Project Name:	Location:	MFG: Hanover Lantern
Fixture Type:	Catalog No.:	Qty:

Specifications

CONSTRUCTION:
Cast aluminum square roof secures to roof with two (2) thumbscrews. Cast aluminum square cage with frog bottom. Cast aluminum cap. Turned aluminum finial. Cast aluminum post fitter slips over 3” dia. post (order separately) or tenon.

FINISH:
Resilient TGIC thermoset polyester powdercoat paint is electrostatically applied to every fixture. Specially formulated for Philips Outdoor Lighting, it provides UV protection, and the highest temperature rating in the industry. In addition to the standard color choices shown, a spectrum of custom colors is available.

PANELS/LENS/GLOBE:
Set of 4 Clear Beveled Glass (CBG) panels (standard). Higher wattages may be used only with glass panels installed.

LAMPING:
60W maximum A19 lamp per medium base socket. Lamp is not included. Higher wattages may be used only with glass panels installed.

ELECTRICAL ASSEMBLY:
Porcelain medium base socket with painted aluminum cover. Fixture is pre-wired with 18 AWG black, white, and ground wires. Lantern will be prewired and tested. All electrical components are ETL listed.

MOUNTING:
Fixture mounts to 3" dia. post or tenon.

WARRANTY:
Lifetime limited warranty.

CERTIFICATIONS:
ETL Listed to U.S. safety standards for wet locations. cETL Listed to Canadian safety standards for wet locations.

Height:
15 3/4"

Width:
6 3/8"

Max. Weight:
5.75 lb.

PHILIPS
Hanover LANTERN
Note: Philips reserves the right to modify the above details to reflect changes in the cost of materials and/or production and/or design without prior notice.
100 Craftway Drive, Littlestown, PA 17340 | P: +1-717-359-7131 F: +1-717-359-8715 | http://www.hanoverlantern.com | Copyright 2013 Philips