# Medium Cape Cod Wall Mount (B25209) Specification Sheet

| | | |
|---|---|---|
| Project Name: | Location: | MFG: Hanover Lantern |
| Fixture Type: | Catalog No.: | Qty: |

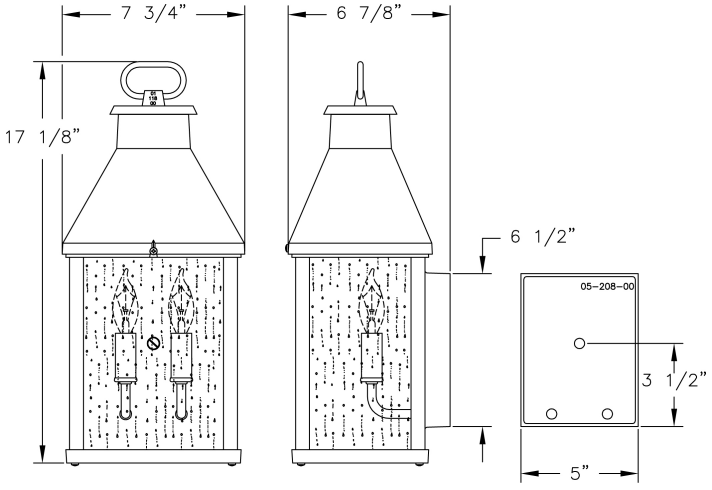


## Ordering Guide

Example: B25209 ABS C C2

| | | |
|---|---|---|
| **Product Code** | B25209 | Medium Cape Cod Wall Mount |
| **Finish** | ABS | Antique Brass |
| | ACP | Antique Copper |
| | ARD | Antique Red |
| | ASI | Antique Silver |
| | BLK | Black |
| | BRN | Brown |
| | BRZ | Bronze |
| | FGN | Forest Green |
| | GRA | Granite |
| | IRN | Ironstone |
| | RBZ | Rustic Bronze |
| | SRT | Shadow Rust |
| | VBZ | Verde Bronze |
| | VCP | Verde Copper |
| | VGN | Verde |
| | VTC | Vintage Copper |
| | WBZ | Weathered Bronze |
| | WHT | White |
| **Panels/Lens/Globe** | C | Clear Seeded Acrylic (standard) |
| | A | Clear Acrylic |
| | E | Clear Textured Acrylic |
| | B | Opal Acrylic |
| | D | Bronze Tone Acrylic |
| | P | Clear Polycarbonate |
| | M | Opal Polycarbonate |
| | Q | Prismatic Polycarbonate |
| **Lamping** | C2 | 2 Candelabras |

## Specifications

**CONSTRUCTION:**
Cast aluminum wall bracket. Cast aluminum roof. To relamp, remove two (2) screws. Extruded aluminum legs with "U" channels secure cage panels. Cast aluminum top & bottom cage frame attaches to legs with machine screws.

**FINISH:**
Resilient TGIC thermoset polyester powdercoat paint is electrostatically applied to every fixture. Specially formulated for Hanover Lantern, it provides UV protection, and the highest temperature rating in the industry. In addition to the standard color choices shown, a spectrum of custom colors is available.

**PANELS/LENS/GLOBE:**
Set of 3 Clear Seeded Acrylic (CSA) panels (standard). Acrylic panels only. Higher wattages may be used only with glass panels installed.

**LAMPING:**
25W maximum B10 lamp per candelabra base. Lamp is not included. Higher wattages may be used only with glass panels installed.

**ELECTRICAL ASSEMBLY:**
Two (2) Candelabra sockets with painted candle cluster. Fixture is pre-wired with 18 AWG black, white, and ground wires. Lantern will be prewired and tested. All electrical components are ETL listed.

**MOUNTING:**
See template for dimensions & mounting instructions.

**WARRANTY:**



PHILIPS
Hanover LANTERN
Note: Philips reserves the right to modify the above details to reflect changes in the cost of materials and/or production and/or design without prior notice.
100 Craftway Drive, Littlestown, PA 17340 | P: +1-717-359-7131 F: +1-717-359-8715 | http://www.hanoverlantern.com | Copyright 2013 Philips

# Medium Cape Cod Wall Mount (B25209) Specification Sheet

| | | |
|---|---|---|
| Project Name: | Location: | MFG: Hanover Lantern |
| Fixture Type: | Catalog No.: | Qty: |

Lifetime limited warranty.

**CERTIFICATIONS:**
ETL Listed to U.S. safety standards for wet locations.  cETL Listed to Canadian safety standards for wet locations.

**Height:**
17 1/8"

**Width:**
7 3/4"

**Projection:**
6 7/8"

**Top to Outlet:**
12"

**Max. Weight:**
9.5 lbs.



PHILIPS
Hanover LANTERN
Note: Philips reserves the right to modify the above details to reflect changes in the cost of materials and/or production and/or design without prior notice.
100 Craftway Drive, Littlestown, PA 17340 | P: +1-717-359-7131 F: +1-717-359-8715 | http://www.hanoverlantern.com | Copyright 2013 Philips