Grosse Pointe (3176) Specification Sheet

Project Name:	Location:	MFG: Hanover Lantern
Fixture Type:	Catalog No.:	Qty:

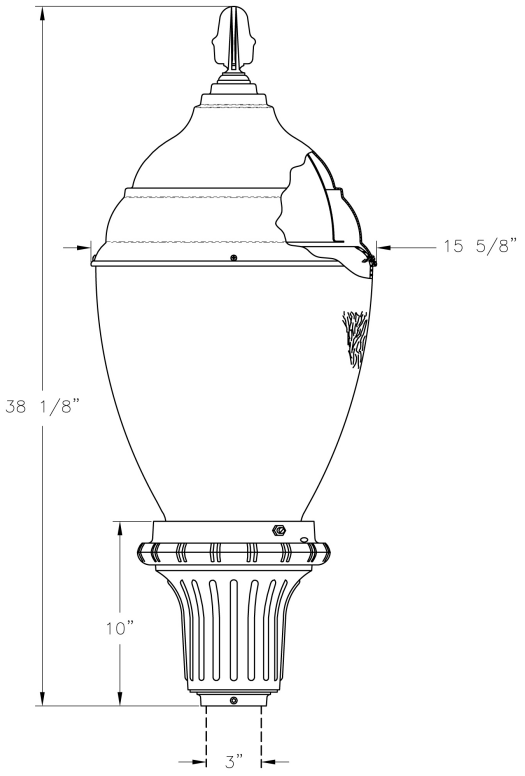

Ordering Guide

Example: 3176 R ABS U D 50H E P B G M

Product Code	3176	Grosse Pointe
Fitter	R	Ribbed
Finish	ABS	Antique Brass
	ACP	Antique Copper
	ARD	Antique Red
	ASI	Antique Silver
	BLK	Black
	BRN	Brown
	BRZ	Bronze
	FGN	Forest Green
	GRA	Granite
	IRN	Ironstone
	RBZ	Rustic Bronze
	SRT	Shadow Rust
	VBZ	Verde Bronze
	VCP	Verde Copper
	VGN	Verde
	VTC	Vintage Copper
	WBZ	Weathered Bronze
	WHT	White
Panel/Globe	U	Lg. Clear Textured Polycarbonate w/ Spun Top
Socket	D	Medium
	G	Mogul
Wattage/Source	50H	50W MH
	70H	70W MH
	10H	100W MH
	15H	150W MH
	35S	35W HPS
	50S	50W HPS
	70S	70W HPS
	10S	100W HPS
	15S	150W HPS
	15I	150W INC.
Voltage	E	120V
	F	208V
	G	240V
	H	277V
Distribution	P	Type V - Cutoff Optics
Photoeye	B	Button Eye
	N	None
Cage	G	Grosse Pointe
	N	None
Finial	M	Maple Leaf
	N	None

Specifications

CONSTRUCTION:
Cast aluminum finial. Spun aluminum top dome secures to globe. Type V Cut-Off Reflector system concealed by top dome.

FINISH:
Resilient TGIC thermoset polyester powdercoat paint is electrostatically applied to every fixture. Specially formulated for Philips Outdoor Lighting, it provides UV protection, and the highest temperature rating in the industry. In addition to the standard color choices shown, a spectrum of custom colors is available.

PHILIPS
Hanover LANTERN

Note: Philips reserves the right to modify the above details to reflect changes in the cost of materials and/or production and/or design without prior notice.
100 Craftway Drive, Littlestown, PA 17340 | P: +1-717-359-7131 F: +1-717-359-8715 | http://www.hanoverlantern.com | Copyright 2013 Philips

Grosse Pointe (3176) Specification Sheet

Project Name:	Location:	MFG: Hanover Lantern
Fixture Type:	Catalog No.:	Qty:

PANELS/LENS/GLOBE:
Clear ripple textured polycarbonate globe U.V. stabilized.

LAMPING:
Lamp is not included.

ELECTRICAL ASSEMBLY:
Lantern will be prewired and tested. All electrical components are ETL listed.

BALLAST:
Two piece cast aluminum watertight ballast compartment with 16 flutes. (Customer must specify ballast wattage and voltage required.)

MOUNTING:
Fixture mounts to 3" dia. post or tenon.

WARRANTY:
Three-year limited warranty.

CERTIFICATIONS:
ETL Listed to U.S. safety standards for wet locations. cETL Listed to Canadian safety standards for wet locations.

Height:
38 1/8"

Width:
15 5/8" or 17 1/8"

Fitter:
3" I.D.

EPA:
1.26 or 2.30 or 2.35

Max. Weight:
32 lbs.

PHILIPS
Hanover LANTERN
Note: Philips reserves the right to modify the above details to reflect changes in the cost of materials and/or production and/or design without prior notice.
100 Craftway Drive, Littlestown, PA 17340 | P: +1-717-359-7131 F: +1-717-359-8715 | http://www.hanoverlantern.com | Copyright 2013 Philips