Phoenix IV (16510) Specification Sheet

Project Name:	Location:	MFG: Hanover Lantern
Fixture Type:	Catalog No.:	Qty:

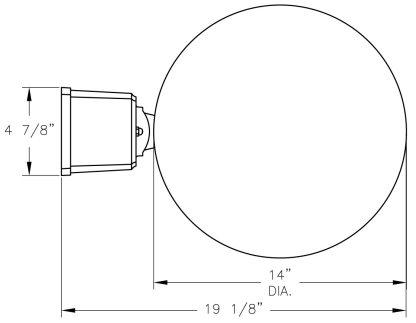

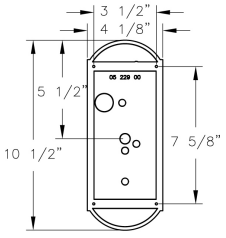

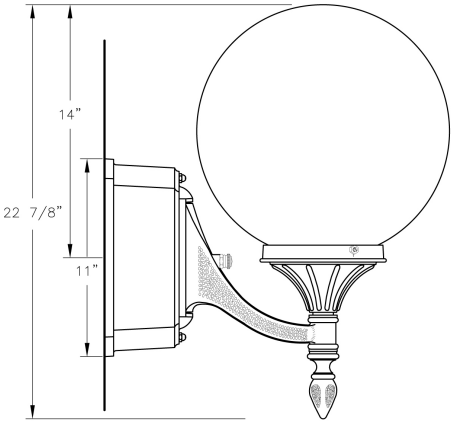

Ordering Guide

Example: 16510 ABS B D 50H E N N

Product Code	16510	Phoenix IV
Finish	ABS	Antique Brass
	ACP	Antique Copper
	ARD	Antique Red
	ASI	Antique Silver
	BLK	Black
	BRN	Brown
	BRZ	Bronze
	FGN	Forest Green
	GRA	Granite
	IRN	Ironstone
	RBZ	Rustic Bronze
	SRT	Shadow Rust
	VBZ	Verde Bronze
	VCP	Verde Copper
	VGN	Verde
	VTC	Vintage Copper
	WBZ	Weathered Bronze
	WHT	White
Panels/Lens/Globe	B	Opal Acrylic
Socket	D	Medium
	R	Induction
Wattage/Source	50H	50W MH
	70H	70W MH
	35S	35W HPS
	50S	50W HPS
	70S	70W HPS
	60I	60W INC.
	55R	55W Induction
Voltage	E	120V
	F	208V
	G	240V
	H	277V
Distribution	N	None
Photoeye	N	None

Specifications

CONSTRUCTION:
Cast aluminum fluted holder. Cast aluminum knob. Cast aluminum bracket arm and ballast housing with wall plate.

FINISH:
Resilient TGIC thermoset polyester powdercoat paint is electrostatically applied to every fixture. Specially formulated for Philips Outdoor Lighting, it provides UV protection, and the highest temperature rating in the industry. In addition to the standard color choices shown, a spectrum of custom colors is available.

PANELS/LENS/GLOBE:
14" dia. Opal Acrylic sphere

LAMPING:
Lamp is not included.

ELECTRICAL ASSEMBLY:
Lantern will be prewired and tested. All electrical components are ETL listed.

BALLAST:
Ballast mounted inside moisture proof housing. (Customer must specify wattage and voltage.)

MOUNTING:
See template for dimensions & mounting instructions.

PHILIPS
Hanover LANTERN
Note: Philips reserves the right to modify the above details to reflect changes in the cost of materials and/or production and/or design without prior notice.
100 Craftway Drive, Littlestown, PA 17340 | P: +1-717-359-7131 F: +1-717-359-8715 | http://www.hanoverlantern.com | Copyright 2013 Philips

Phoenix IV (16510) Specification Sheet

Project Name:	Location:	MFG: Hanover Lantern
Fixture Type:	Catalog No.:	Qty:

WARRANTY:
Three-year limited warranty.

CERTIFICATIONS:
ETL Listed to U.S. safety standards for wet locations. cETL Listed to Canadian safety standards for wet locations.

Height:
22 7/8"

Width:
14"

Projection:
19 1/8"

Top to Outlet:
14"

Max. Weight:

PHILIPS
Hanover LANTERN
Note: Philips reserves the right to modify the above details to reflect changes in the cost of materials and/or production and/or design without prior notice.
100 Craftway Drive, Littlestown, PA 17340 | P: +1-717-359-7131 F: +1-717-359-8715 | http://www.hanoverlantern.com | Copyright 2013 Philips