Anchor Base Post (791-) Specification Sheet

Project Name:	Location:	MFG: Hanover Lantern
Fixture Type:	Catalog No.:	Qty:

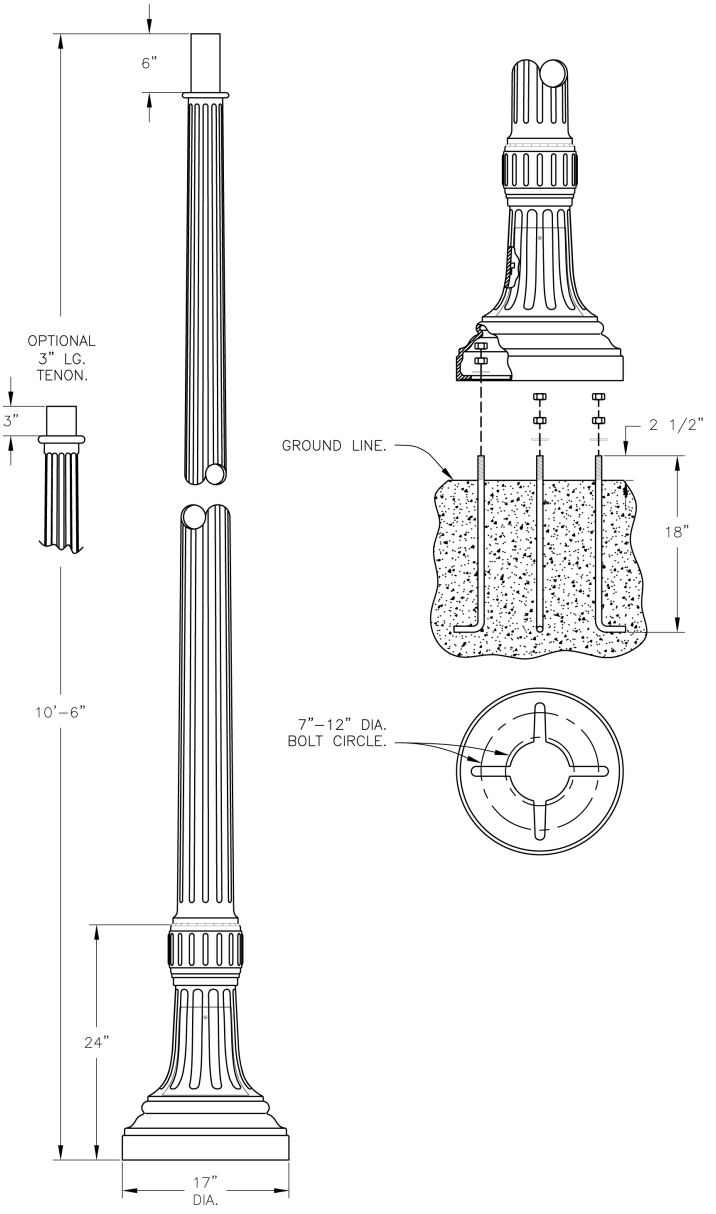

Ordering Guide

Example: 791- 10 ABS 3 B B

Product Code	791-	Anchor Base Post
Height(s)	10 12	(10 ft.) (12 ft.)
Finish	ABS ACP ARD ASI BLK BRN BRZ FGN GRA IRN RBZ SRT VBZ VCP VGN VTC WBZ WHT	Antique Brass Antique Copper Antique Red Antique Silver Black Brown Bronze Forest Green Granite Ironstone Rustic Bronze Shadow Rust Verde Bronze Verde Copper Verde Vintage Copper Weathered Bronze White
Tenon Option	3 4	3" dia. 4" dia.
Photoeye (Optional)	B C	120V 208V - 277V
Outlet Location (Optional)	B T	4" from Top of Base 12" from Top of Pole

Specifications

CONSTRUCTION:
Cast aluminum anchor base. Cast aluminum removable access door. Tapered post welded to base. Tenon part of post top.

FINISH:
Resilient TGIC thermoset polyester powdercoat paint is electrostatically applied to every fixture. Specially formulated for Philips Outdoor Lighting, it provides UV protection, and the highest temperature rating in the industry. In addition to the standard color choices shown, a spectrum of custom colors is available.

WARRANTY:

PHILIPS
Hanover LANTERN
Note: Philips reserves the right to modify the above details to reflect changes in the cost of materials and/or production and/or design without prior notice.
100 Craftway Drive, Littlestown, PA 17340 | P: +1-717-359-7131 F: +1-717-359-8715 | http://www.hanoverlantern.com | Copyright 2013 Philips

Anchor Base Post (791-) Specification Sheet

Project Name:	Location:	MFG: Hanover Lantern
Fixture Type:	Catalog No.:	Qty:

Three-year limited warranty.

Tenon/Top:
3" O.D.

Bolt Circle:
12" dia.

Anchor Rods:
(4) 3/4" dia. x 15" long zinc plated steel

Base Dimensions:
17" dia. x 24"

Shaft:
5" to 3" Tapered

Wall Thickness:
.250"

Height:
10', 12'

Pole EPA Values

	Height	
Windspeed(mph)	10'	12'
80	35.3700	27.6200
110	18.0100	13.7300

PHILIPS
Hanover LANTERN
Note: Philips reserves the right to modify the above details to reflect changes in the cost of materials and/or production and/or design without prior notice.
100 Craftway Drive, Littlestown, PA 17340 | P: +1-717-359-7131 F: +1-717-359-8715 | http://www.hanoverlantern.com | Copyright 2013 Philips