Citadel ((DISCONTINUED) 6734) Specification Sheet

Project Name:	Location:	MFG: Hanover Lantern
Fixture Type:	Catalog No.:	Qty:

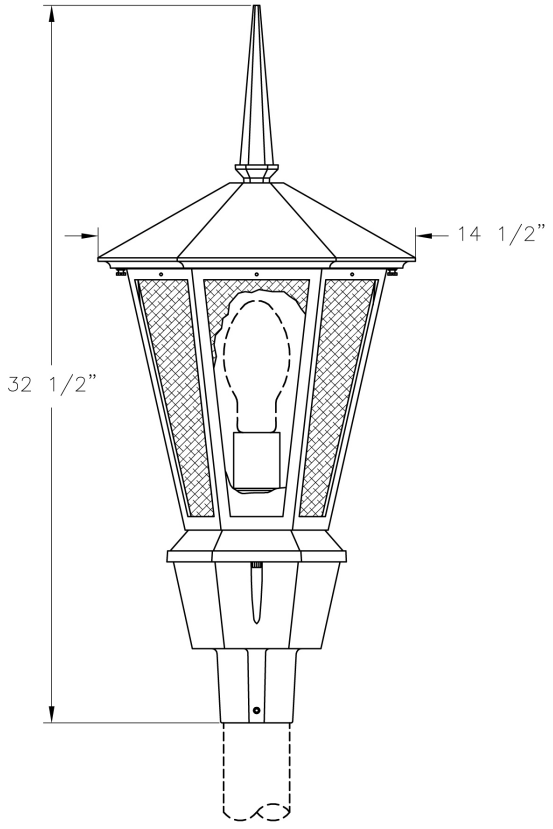

Ordering Guide

Example: (DISCONTINUED) 6734 ABS A D 50H E B B

Product Code	(DISCONTINUED) 6734	Citadel
Finish	ABS	Antique Brass
	ACP	Antique Copper
	ARD	Antique Red
	ASI	Antique Silver
	BLK	Black
	BRN	Brown
	BRZ	Bronze
	FGN	Forest Green
	GRA	Granite
	IRN	Ironstone
	RBZ	Rustic Bronze
	SRT	Shadow Rust
	VBZ	Verde Bronze
	VCP	Verde Copper
	VGN	Verde
	VTC	Vintage Copper
	WBZ	Weathered Bronze
	WHT	White
Panel/Globe	A	Clear Acrylic
	B	Opal Acrylic
	C	Clear Seeded Acrylic
	D	Bronze Tone Acrylic
	E	Clear Textured Acrylic
	M	Opal Polycarbonate
	P	Clear Polycarbonate
	Q	Prismatic Polycarbonate
Socket	D	Medium
	G	Mogul
	L	LED
Wattage/Source	50H	50W MH
	70H	70W MH
	100H	100W MH
	150H	150W MH
	35S	35W HPS
	50S	50W HPS
	70S	70W HPS
	100S	100W HPS
	150S	150W HPS
	150I	150W INC.
	LED	LED
Voltage	E	120V
	F	208V
	G	240V
	H	277V
Distribution	B	6" Type V Distrib.
	C	6" Type III Distrib.
	V	Type V - Cone
	N	None
Photoeye	B	Button Eye
	N	None

PHILIPS
Hanover LANTERN

Note: Philips reserves the right to modify the above details to reflect changes in the cost of materials and/or production and/or design without prior notice.
100 Craftway Drive, Littlestown, PA 17340 | P: +1-717-359-7131 F: +1-717-359-8715 | http://www.hanoverlantern.com | Copyright 2013 Philips

Citadel ((DISCONTINUED) 6734) Specification Sheet

Project Name:	Location:	MFG: Hanover Lantern
Fixture Type:	Catalog No.:	Qty:

Specifications

CONSTRUCTION:
Cast aluminum finial. Cast aluminum hex roof secured to cage with two thumbscrews. Cast aluminum hex cage. Cast aluminum post fitter slips over 3” dia. post or tenon.

FINISH:
Resilient TGIC thermoset polyester powdercoat paint is electrostatically applied to every fixture. Specially formulated for Philips Outdoor Lighting, it provides UV protection, and the highest temperature rating in the industry. In addition to the standard color choices shown, a spectrum of custom colors is available.

PANELS/LENS/GLOBE:
See lenses for available options.

LAMPING:
Lamp is not included.

ELECTRICAL ASSEMBLY:
Lantern will be prewired and tested. All electrical components are ETL listed.

BALLAST:
Ballast and component parts mounted inside 2-piece cast aluminum moisture proof ballast compartment. (Customer must specify ballast wattage and voltage desired.)

MOUNTING:
Fixture mounts to 3" dia. post or tenon.

WARRANTY:
Three-year limited warranty.

CERTIFICATIONS:
ETL Listed to U.S. safety standards for wet locations. cETL Listed to Canadian safety standards for wet locations.

Height:
32 1/2"

Width:
14 1/2"

Fitter:
3" I.D.

EPA:
1.24

Max. Weight:
24 lbs.

PHILIPS
Hanover LANTERN
Note: Philips reserves the right to modify the above details to reflect changes in the cost of materials and/or production and/or design without prior notice.
100 Craftway Drive, Littlestown, PA 17340 | P: +1-717-359-7131 F: +1-717-359-8715 | http://www.hanoverlantern.com | Copyright 2013 Philips