Bollards ((DISCONTINUED) 6385) Specification Sheet

Project Name:	Location:	MFG: Hanover Lantern
Fixture Type:	Catalog No.:	Qty:

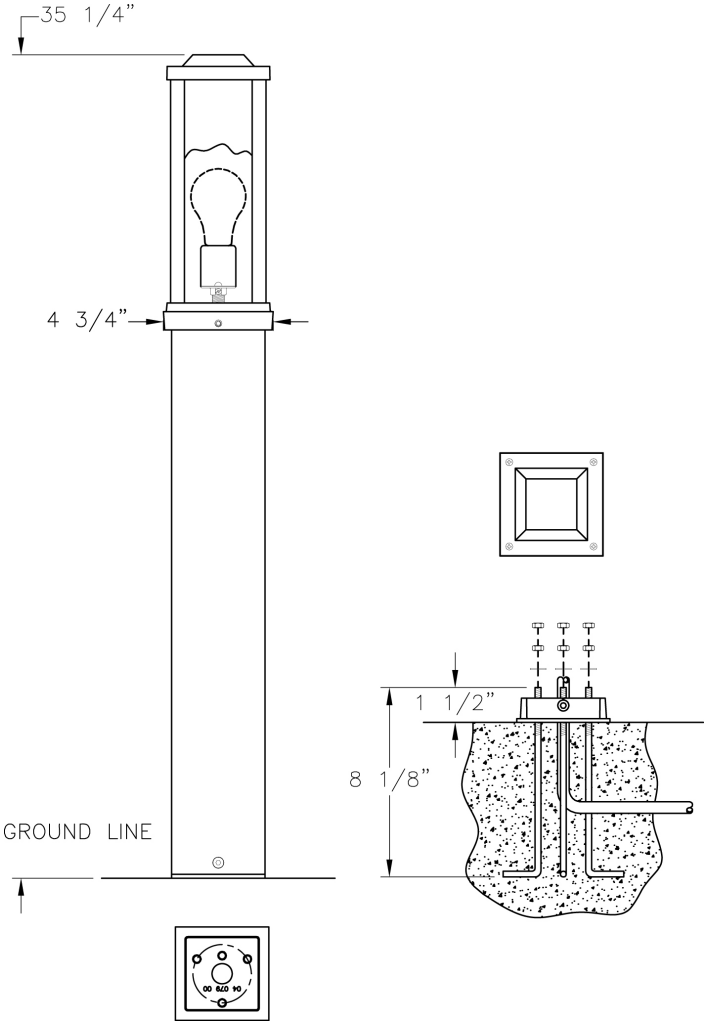

Ordering Guide

Example: (DISCONTINUED) 6385 WBZ A D 40I E

Product Code	(DISCONTINUED) 6385	Bollards	
Finish	WBZ	Weathered Bronze	
	ABS	Antique Brass	
	ACP	Antique Copper	
	ARD	Antique Red	
	ASI	Antique Silver	
	BLK	Black	
	BRN	Brown	
	BRZ	Bronze	
	FGN	Forest Green	
	GRA	Granite	
	IRN	Ironstone	
	RBZ	Rustic Bronze	
	SRT	Shadow Rust	
	VBZ	Verde Bronze	
	VCP	Verde Copper	
	VGN	Verde	
	VTC	Vintage Copper	
	WHT	White	
Panels/Lens/Globe	A	Clear Acrylic	
	B	Opal Acrylic	
	C	Clear Seeded Acrylic	
	D	Bronze Tone Acrylic	
	E	Clear Textured Acrylic	
	M	Opal Polycarbonate	
	P	Clear Polycarbonate	
	Q	Prismatic Polycarbonate	
Socket	D	Medium	
	F	Fluorescent	
Wattage/Source	40I	40W INC.	
	13F	13W Fluorescent	*1
	18F	18W Fluorescent	*1
	26F	26W Fluorescent	*1
Voltage	E	120V	
	F	208V	
	G	240V	
	H	277V	

*1 Only (F) Socket for Fluorescent Models

Specifications

CONSTRUCTION:
Cast aluminum square roof. Four (4) extruded aluminum legs. Cast aluminum bottom cage frame. 4" sq. x .125" wall extruded aluminum post. Cast aluminum 4" sq. anchor base supplied with anchor rods.

FINISH:
Resilient TGIC thermoset polyester powdercoat paint is electrostatically applied to every fixture. Specially formulated for Hanover Lantern, it provides UV protection, and the highest temperature rating in the industry. In addition to the standard color choices shown, a spectrum of custom colors is available.

PHILIPS
Hanover LANTERN
Note: Philips reserves the right to modify the above details to reflect changes in the cost of materials and/or production and/or design without prior notice.
100 Craftway Drive, Littlestown, PA 17340 | P: +1-717-359-7131 F: +1-717-359-8715 | http://www.hanoverlantern.com | Copyright 2013 Philips

Bollards ((DISCONTINUED) 6385) Specification Sheet

Project Name:	Location:	MFG: Hanover Lantern
Fixture Type:	Catalog No.:	Qty:

PANELS/LENS/GLOBE:
See lens available.

LAMPING:
Lamp is not included.

ELECTRICAL ASSEMBLY:
Lantern will be pre-wired and tested. All electrical components are ETL listed.

BALLAST:
Customer must specify wattage desired.

MOUNTING:
See template for dimensions & mounting instructions.

WARRANTY:
Three-year limited warranty.

CERTIFICATIONS:
ETL Listed to U.S. safety standards for wet locations. cETL Listed to Canadian safety standards for wet locations.

Bolt Circle:
2 1/2" dia.

Anchor Rods:
(3) 1/4-20 zinc plated steel

Base Dimensions:
4 3/4" sq.

Height:
35 1/4"

PHILIPS
Hanover LANTERN
Note: Philips reserves the right to modify the above details to reflect changes in the cost of materials and/or production and/or design without prior notice.
100 Craftway Drive, Littlestown, PA 17340 | P: +1-717-359-7131 F: +1-717-359-8715 | http://www.hanoverlantern.com | Copyright 2013 Philips