RLM Bracket ((DISCONTINUED) 36) Specification Sheet

Project Name:	Location:	MFG: Hanover Lantern
Fixture Type:	Catalog No.:	Qty:

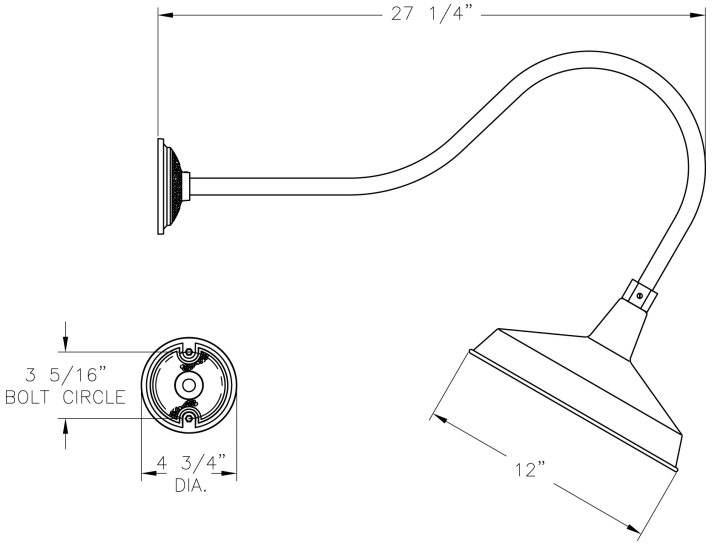

Ordering Guide

Example: (DISCONTINUED) 36 241 ABS

Product Code	(DISCONTINUED) 36	RLM Bracket
RLM Shade	241	Small
	441	Medium
	641	Large
	251	Small
	451	Medium
	261	Small
	461	Medium
	271	Small
	471	Medium
	481	Medium
	681	Large
	291	Small
	491	Medium
	691	Large
	292	Small
	492	Medium
	692	Large
Finish	ABS	Antique Brass
	ACP	Antique Copper
	ARD	Antique Red
	ASI	Antique Silver
	BLK	Black
	BRN	Brown
	BRZ	Bronze
	FGN	Forest Green
	GRA	Granite
	IRN	Ironstone
	RBZ	Rustic Bronze
	SRT	Shadow Rust
	VBZ	Verde Bronze
	VCP	Verde Copper
	VGN	Verde
	VTC	Vintage Copper
	WBZ	Weathered Bronze
	WHT	White
	RED	RLM Red

*RLM Shade Each RLM Shade Style has its own product page. (Search by model number.)

Specifications

CONSTRUCTION:
Cast aluminum 4 3/4" dia. decorative wall moutning plate with locking set screw. 1/2" Schedule 40 pipe formed aluminum arm.

(All RLM Configurations visible under Specification Sheets under the Product Image.)

FINISH:
Resilient TGIC thermoset polyester powdercoat paint is electrostatically applied to every fixture. Specially formulated for Philips Outdoor Lighting, it provides UV protection, and the highest temperature rating in the industry. In addition to the standard color choices shown, a spectrum of custom colors is available.

MOUNTING:
Mounting Hardware is supplied.

WARRANTY:
Three-year limited warranty.

CERTIFICATIONS:
ETL Listed to U.S. safety standards for wet locations. cETL Listed to Canadian safety standards for wet locations.

PHILIPS
Hanover LANTERN
Note: Philips reserves the right to modify the above details to reflect changes in the cost of materials and/or production and/or design without prior notice.
100 Craftway Drive, Littlestown, PA 17340 | P: +1-717-359-7131 F: +1-717-359-8715 | http://www.hanoverlantern.com | Copyright 2013 Philips

RLM Bracket ((DISCONTINUED) 36) Specification Sheet

Project Name:	Location:	MFG: Hanover Lantern
Fixture Type:	Catalog No.:	Qty:

Height:
11 3/4"

Width:
4 3/4" dia.

Projection:
27 1/4"

Top to Outlet:
6 3/4"

PHILIPS
Hanover LANTERN
Note: Philips reserves the right to modify the above details to reflect changes in the cost of materials and/or production and/or design without prior notice.
100 Craftway Drive, Littlestown, PA 17340 | P: +1-717-359-7131 F: +1-717-359-8715 | http://www.hanoverlantern.com | Copyright 2013 Philips