# Small South Bend Wall Mount (B512FRMA) Specification Sheet

| | | |
|---|---|---|
| Project Name: | Location: | MFG: Hanover Lantern |
| Fixture Type: | Catalog No.: | Qty: |

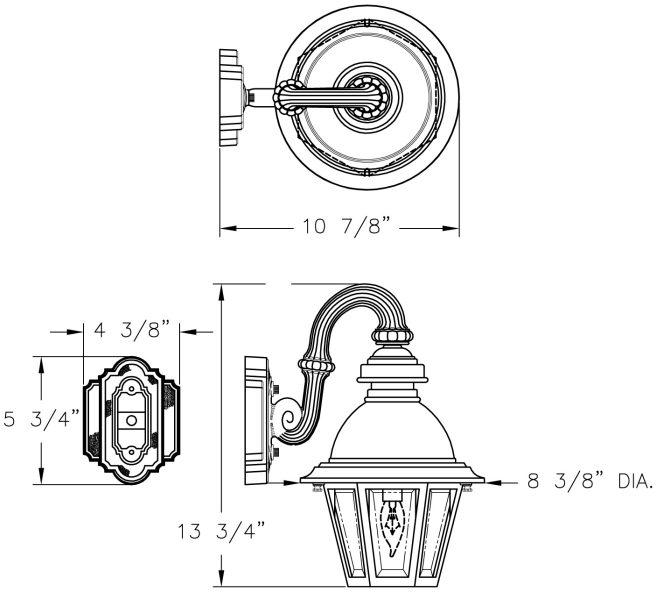


## Ordering Guide

Example: B512FRMA ABS J C1

| | | |
|---|---|---|
| **Product Code** | B512FRMA | Small South Bend Wall Mount |
| **Finish** | ABS | Antique Brass |
| | ACP | Antique Copper |
| | ARD | Antique Red |
| | ASI | Antique Silver |
| | BLK | Black |
| | BRN | Brown |
| | BRZ | Bronze |
| | FGN | Forest Green |
| | GRA | Granite |
| | IRN | Ironstone |
| | RBZ | Rustic Bronze |
| | SRT | Shadow Rust |
| | VBZ | Verde Bronze |
| | VCP | Verde Copper |
| | VGN | Verde |
| | VTC | Vintage Copper |
| | WBZ | Weathered Bronze |
| | WHT | White |
| **Panels/Lens/Globe** | J | Clear Beveled Glass |
| | G | Clear Glass |
| | K | Clear Seeded Glass |
| | F | Frosted Glass |
| | H | Opalescent Honey Glass |
| | L | White Iridescent |
| | C | Clear Seeded Acrylic |
| | B | Opal Acrylic |
| | A | Clear Acrylic |
| | D | Bronze Tone Acrylic |
| | E | Clear Textured Acrylic |
| | P | Clear Polycarbonate |
| | M | Opal Polycarbonate |
| | Q | Prismatic Polycarbonate |
| **Lamping** | C1 | Candelabra |

## Specifications

**CONSTRUCTION:**
Cast Aluminum "S" fluted bracket arm. Painted spun aluminum dome. Cast aluminum wallplate. Spun aluminum top cap and neck. Cast aluminum roof ring secures to cage. Cast aluminum hex cage with open bottom.

**FINISH:**
Resilient TGIC thermoset polyester powdercoat paint is electrostatically applied to every fixture. Specially formulated for Philips Outdoor Lighting, it provides UV protection, and the highest temperature rating in the industry. In addition to the standard color choices shown, a spectrum of custom colors is available.

**PANELS/LENS/GLOBE:**
Set of 6 Clear Beveled Glass (CBG) panels (standard). Higher wattages may be used only with glass panels installed.

**LAMPING:**
25W maximum B10 lamp per candelabra base. Lamp is not included. Higher wattages may be used only with glass panels installed.



PHILIPS
Hanover LANTERN
Note: Philips reserves the right to modify the above details to reflect changes in the cost of materials and/or production and/or design without prior notice.
100 Craftway Drive, Littlestown, PA 17340 | P: +1-717-359-7131 F: +1-717-359-8715 | http://www.hanoverlantern.com | Copyright 2013 Philips

# Small South Bend Wall Mount (B512FRMA) Specification Sheet

| | | |
|---|---|---|
| Project Name: | Location: | MFG: Hanover Lantern |
| Fixture Type: | Catalog No.: | Qty: |

**ELECTRICAL ASSEMBLY:**
Single Candelabra socket with painted aluminum sleeve. Fixture is pre-wired with 18 AWG black, white, and ground wires. Lantern will be prewired and tested. All electrical components are ETL listed.

**MOUNTING:**
See template for dimensions & mounting instructions.

**WARRANTY:**
Lifetime limited warranty.

**CERTIFICATIONS:**
ETL Listed to U.S. safety standards for wet locations. cETL Listed to Canadian safety standards for wet locations.

**Height:**
13 3/4"

**Width:**
8 3/8"

**Projection:**
10 7/8"

**Top to Outlet:**
6 1/4"

**Max. Weight:**
8.75 lbs.



PHILIPS
Hanover LANTERN
Note: Philips reserves the right to modify the above details to reflect changes in the cost of materials and/or production and/or design without prior notice.
100 Craftway Drive, Littlestown, PA 17340 | P: +1-717-359-7131 F: +1-717-359-8715 | http://www.hanoverlantern.com | Copyright 2013 Philips