Medium Fluorescent Gemini Post Mount (B7930FL) Specification Sheet

Project Name:	Location:	MFG: Hanover Lantern
Fixture Type:	Catalog No.:	Qty:

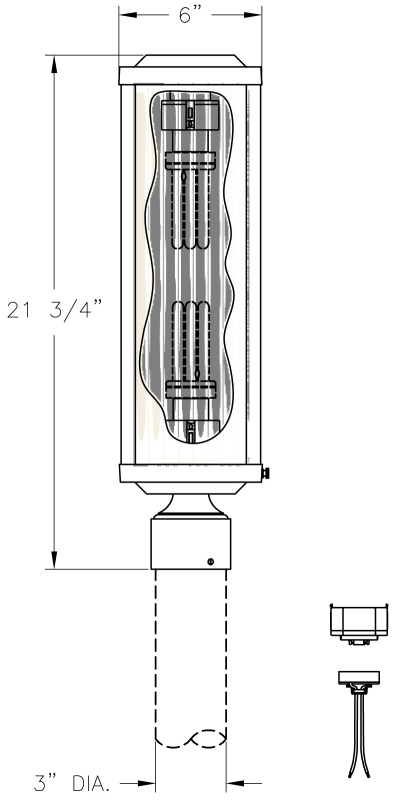

Ordering Guide

Example: B7930FL ABS B 13W

Product Code	B7930FL	Medium Fluorescent Gemini Post Mount
Finish	ABS	Antique Brass
	ACP	Antique Copper
	ARD	Antique Red
	ASI	Antique Silver
	BLK	Black
	BRN	Brown
	BRZ	Bronze
	FGN	Forest Green
	GRA	Granite
	IRN	Ironstone
	RBZ	Rustic Bronze
	SRT	Shadow Rust
	VBZ	Verde Bronze
	VCP	Verde Copper
	VGN	Verde
	VTC	Vintage Copper
	WBZ	Weathered Bronze
	WHT	White
Panels/Lens/Globe	B	Opal Acrylic (standard)
	A	Clear Acrylic
Wattage/Source	13W	Fluorescent 13W
	18W	Fluorescent 18W
	26W	Fluorescent 26W

Specifications

CONSTRUCTION:
Extruded aluminum legs with "U" channels secure cage panels. Cast aluminum square end caps. Cast aluminum post fitter slips over 3” dia. post (order separately) or tenon.

FINISH:
Resilient TGIC thermoset polyester powdercoat paint is electrostatically applied to every fixture. Specially formulated for Hanover Lantern, it provides UV protection, and the highest temperature rating in the industry. In addition to the standard color choices shown, a spectrum of custom colors is available.

PANELS/LENS/GLOBE:
Set of 4 Opal Acrylic (OA) panels (standard). Acrylic panels only. More opaque or colored panels are preferred to help conceal an Energy Star or Fluorescent Lamp.

LAMPING:
26W maximum fluorescent ballast. Twist lock GX24q four (4) pin socket ballast provided. Electronic fluorescent ballast (Customer must specify wattage). 120 volt HPF supplied. (Lamp not supplied).

ELECTRICAL ASSEMBLY:
Fixture is pre-wired with 18 AWG black, white, and ground wires. Lantern will be prewired and tested. All electrical components are ETL listed.

MOUNTING:
Fixture mounts to 3" dia. post or tenon.

WARRANTY:
Lifetime limited warranty.

CERTIFICATIONS:
ETL Listed to U.S. safety standards for wet locations. cETL Listed to Canadian safety standards for wet locations.

Height:
21 3/4"

PHILIPS
Hanover LANTERN
Note: Philips reserves the right to modify the above details to reflect changes in the cost of materials and/or production and/or design without prior notice.
100 Craftway Drive, Littlestown, PA 17340 | P: +1-717-359-7131 F: +1-717-359-8715 | http://www.hanoverlantern.com | Copyright 2013 Philips

Medium Fluorescent Gemini Post Mount (B7930FL) Specification Sheet

Project Name:	Location:	MFG: Hanover Lantern
Fixture Type:	Catalog No.:	Qty:

Width:
6"

Max. Weight:

PHILIPS
Hanover LANTERN
Note: Philips reserves the right to modify the above details to reflect changes in the cost of materials and/or production and/or design without prior notice.
100 Craftway Drive, Littlestown, PA 17340 | P: +1-717-359-7131 F: +1-717-359-8715 | http://www.hanoverlantern.com | Copyright 2013 Philips