Clifton Park ((DISCONTINUED) 17470) Specification Sheet

Project Name:	Location:	MFG: Hanover Lantern
Fixture Type:	Catalog No.:	Qty:

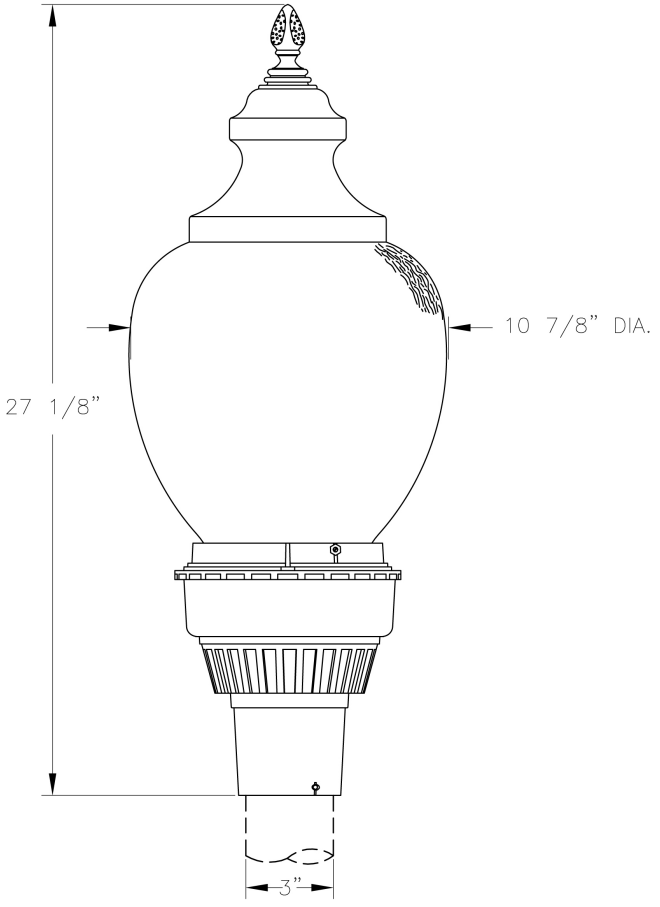

Ordering Guide

Example: (DISCONTINUED) 17470 ABS T D 50H E N N

Product Code	(DISCONTINUED) 17470	Clifton Park
Finish	ABS ACP ARD ASI BLK BRN BRZ FGN GRA IRN RBZ SRT VBZ VCP VGN VTC WBZ WHT	Antique Brass Antique Copper Antique Red Antique Silver Black Brown Bronze Forest Green Granite Ironstone Rustic Bronze Shadow Rust Verde Bronze Verde Copper Verde Vintage Copper Weathered Bronze White
Panels/Lens/Globe	T	Lg. Clear Textured Polycarbonate
Socket	D	Medium
Wattage/Source	50H 70H 100H 35S 50S 70S 100S 100I	50W MH 70W MH 100W MH 35W HPS 50W HPS 70W HPS 100W HPS 100W INC.
Voltage	E F G H	120V 208V 240V 277V
Distribution	N	None
Photoeye	N	None

Specifications

CONSTRUCTION:
Cast aluminum finial. Brass check ring. Fitter slips over 3" dia. post or tenon.

FINISH:
Resilient TGIC thermoset polyester powdercoat paint is electrostatically applied to every fixture. Specially formulated for Hanover Lantern, it provides UV protection, and the highest temperature rating in the industry. In addition to the standard color choices shown, a spectrum of custom colors is available.

PANELS/LENS/GLOBE:
10 7/8" dia. decorative globe with 6" dia. molded neck, Clear ripple textured polycarbonate, U.V. stabilized.

LAMPING:
Lamp is not included.

ELECTRICAL ASSEMBLY:
Lantern will be prewired and tested. All electrical components are ETL listed.

BALLAST:

PHILIPS
Hanover LANTERN
Note: Philips reserves the right to modify the above details to reflect changes in the cost of materials and/or production and/or design without prior notice.
100 Craftway Drive, Littlestown, PA 17340 | P: +1-717-359-7131 F: +1-717-359-8715 | http://www.hanoverlantern.com | Copyright 2013 Philips

Clifton Park ((DISCONTINUED) 17470) Specification Sheet

Project Name:	Location:	MFG: Hanover Lantern
Fixture Type:	Catalog No.:	Qty:

Cast aluminum two-piece moisture proof fluted ballast pod. (Customer must specify wattage and voltage.)

MOUNTING:
Fixture mounts to 3" dia. post or tenon.

WARRANTY:
Three-year limited warranty.

CERTIFICATIONS:
ETL Listed to U.S. safety standards for wet locations. cETL Listed to Canadian safety standards for wet locations.

Height:
27"

Width:
11"

Fitter:
3" I.D.

EPA:
1.19

Max. Weight:
25 lbs.

PHILIPS
Hanover LANTERN
Note: Philips reserves the right to modify the above details to reflect changes in the cost of materials and/or production and/or design without prior notice.
100 Craftway Drive, Littlestown, PA 17340 | P: +1-717-359-7131 F: +1-717-359-8715 | http://www.hanoverlantern.com | Copyright 2013 Philips