RLM Bracket ((DISCONTINUED) 34) Specification Sheet

Project Name:	Location:	MFG: Hanover Lantern
Fixture Type:	Catalog No.:	Qty:

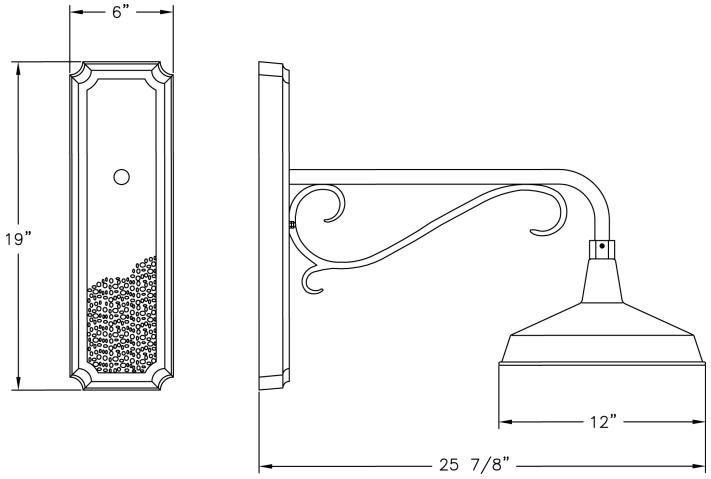

Ordering Guide

Example: (DISCONTINUED) 34 241 ABS W

Product Code	(DISCONTINUED) 34	RLM Bracket	
RLM Shade	241	Small	
	441	Medium	
	641	Large	
	251	Small	
	451	Medium	
	261	Small	
	461	Medium	
	271	Small	
	471	Medium	
	481	Medium	
	681	Large	
	291	Small	
	491	Medium	
	691	Large	
	292	Small	
	492	Medium	
	692	Large	
Finish	ABS	Antique Brass	
	ACP	Antique Copper	
	ARD	Antique Red	
	ASI	Antique Silver	
	BLK	Black	
	BRN	Brown	
	BRZ	Bronze	
	FGN	Forest Green	
	GRA	Granite	
	IRN	Ironstone	
	RBZ	Rustic Bronze	
	SRT	Shadow Rust	
	VBZ	Verde Bronze	
	VCP	Verde Copper	
	VGN	Verde	
	VTC	Vintage Copper	
	WBZ	Weathered Bronze	
	WHT	White	
	RED	RLM Red	
Wire Guard	W	Wire Guard	*1
	N	No Wire Guard	

*1 For 241, 441, 641 Shades Only
*RLM Shade Each RLM Shade Style has its own product page. (Search by model number.)

Specifications

CONSTRUCTION:
Cast aluminum decorative wall mounting plate. Cast aluminum decorative scroll securely welded to arm and wall plate. 1/2" Schedule 40 pipe formed aluminum arm.

(All RLM Configurations visible under Specification Sheets under the Product Image.)

FINISH:
Resilient TGIC thermoset polyester powdercoat paint is electrostatically applied to every fixture. Specially formulated for Hanover Lantern, it provides UV protection, and the highest temperature rating in the industry. In addition to the standard color choices shown, a spectrum of custom colors is available.

MOUNTING:
Mounting Hardware is supplied.

WARRANTY:
Three-year limited warranty.

PHILIPS
Hanover LANTERN
Note: Philips reserves the right to modify the above details to reflect changes in the cost of materials and/or production and/or design without prior notice.
100 Craftway Drive, Littlestown, PA 17340 | P: +1-717-359-7131 F: +1-717-359-8715 | http://www.hanoverlantern.com | Copyright 2013 Philips

RLM Bracket ((DISCONTINUED) 34) Specification Sheet

Project Name:	Location:	MFG: Hanover Lantern
Fixture Type:	Catalog No.:	Qty:

CERTIFICATIONS:
ETL Listed to U.S. safety standards for wet locations. cETL Listed to Canadian safety standards for wet locations.

Height:
19"

Width:
6" dia.

Projection:
20"

Top to Outlet:
6 5/8"

PHILIPS
Hanover LANTERN
Note: Philips reserves the right to modify the above details to reflect changes in the cost of materials and/or production and/or design without prior notice.
100 Craftway Drive, Littlestown, PA 17340 | P: +1-717-359-7131 F: +1-717-359-8715 | http://www.hanoverlantern.com | Copyright 2013 Philips